HP LaserJet Enterprise X60357

User Guide

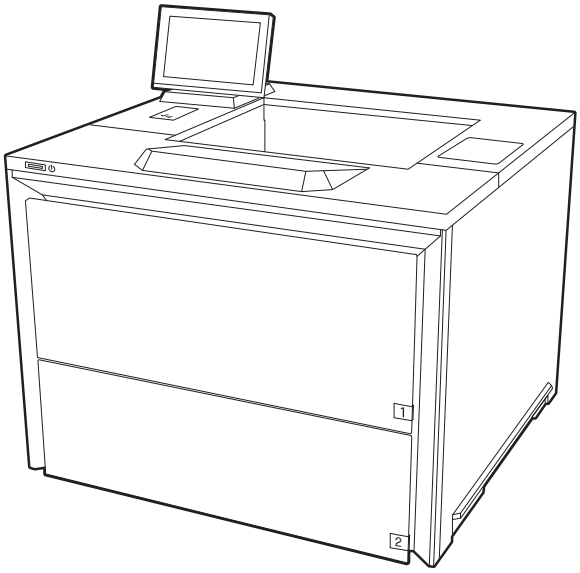

www.hp.com/support/ljX60000dn

HP LaserJet Enterprise X60357 - User Guide

SUMMARY

This guide provides configuration, use, warranty, safety and environmental information.

Legal information

Copyright and License

© Copyright 2026 HP Development Company, L.P.

Reproduction, adaptation, or translation without prior written permission is prohibited, except as allowed under the copyright laws.

The information contained herein is subject to change without notice.

The only warranties for HP products and services are set forth in the express warranty statements accompanying such products and services. Nothing herein should be construed as constituting an additional warranty. HP shall not be liable for technical or editorial errors or omissions contained herein.

Edition 1, 6/2026

Trademark Credits

Adobe®, Adobe Photoshop®, Acrobat®, and PostScript® are trademarks of Adobe Systems Incorporated.

Apple and the Apple logo are trademarks of Apple Inc., registered in the U.S. and other countries.

macOS is a trademark of Apple Inc., registered in the U.S. and other countries.

AirPrint is a trademark of Apple Inc., registered in the U.S. and other countries.

Google™ is a trademark of Google Inc.

Microsoft®, Windows®, and Windows Server® are U.S. registered trademarks of Microsoft Corporation.

UNIX® is a registered trademark of The Open Group.

Table of contents

1 Printer overview 1

Warning icons 1

Potential shock hazard 2

Printer views (X60357, X60357dn) 2

Printer front view 2

Printer rear view 3

Control-panel view 4

Printer specifications 6

Technical specifications (X60357, X60357dn) 6

Supported operating systems 8

Mobile printing solutions 9

Printer dimensions (X60357, X60357dn) 9

Power consumption, electrical specifications, and acoustic emissions 10

Operating-environment range 10

Printer hardware setup and software installation 10

2 Paper trays 12

Load paper to Tray 1 (multipurpose tray) 12

Load Tray 1 (multipurpose tray) 12

Tray 1 (multipurpose tray) paper orientation 15

Load paper to Tray 2-5 18

Load Tray 2 or the optional 550-sheet trays 18

Tray 2 and the optional 550-sheet trays paper orientation 21

Use alternative letterhead mode 24

Load and print envelopes 24

Print envelopes 25

Tray 1 envelope orientation 25

Envelope Feeder Kit envelope orientation 26

Load and print labels 26

Manually feed labels 26

Label orientation 27

3 Supplies, accessories, and parts 28

Order supplies, accessories, and parts 28

Ordering 28

Replace the toner cartridge 28

Toner cartridge information 28

Remove and replace the toner cartridge 29

4 Print 33

Print tasks (Windows) 33

How to print (Windows) 33
Automatically print on both sides (Windows) 34
Manually print on both sides (Windows) 34
Print multiple pages per sheet (Windows) 34
Select the paper type (Windows) 35
Additional print tasks 35

Print tasks (macOS) 36
How to print (macOS) 36
Automatically print on both sides (macOS) 36
Manually print on both sides (macOS) 37
Print multiple pages per sheet (macOS) 37
Select the paper type (macOS) 37
Additional print tasks 38

Store print jobs on the printer to print later or print privately 38
Introduction 38
Create a stored job (Windows) 38
Create a stored job (macOS) 39
Print a stored job 40
Delete a stored job 40
Information sent to printer for Job Accounting purposes 41

Mobile printing 41
Mobile printing solutions 41
Wi-Fi, Wi-Fi Direct Print, NFC, and BLE printing 42
AirPrint 43
Android embedded printing 43

Print from a USB flash drive 43
Enable the USB port for printing 44
Print USB documents (keypad control panel) 44

Print using high-speed USB 2.0 port (wired) 45
Method one: Enable the high-speed USB 2.0 port from the printer control panel menus 45
Method two: Enable the high-speed USB 2.0 port from the HP Embedded Web Server (network-connected printers only) 45

Print using the SuperSpeed USB 3.0 port (wired) 46
Method one: Enable the SuperSpeed USB 3.0 port from the printer control panel menus 46
Method two: Enable the SuperSpeed USB 3.0 port from the HP Embedded Web Server (network-connected printers only) 46

5 Manage the printer 48

Advanced configuration with the HP Embedded Web Server (EWS) 48
Introduction 48
How to access the HP Embedded Web Server (EWS) 49
HP Embedded Web Server features 49

Configure IP network settings 56
Printer sharing disclaimer 56
View or change network settings 56
Rename the printer on a network 57
Manually configure IPv4 TCP/IP parameters from the control panel 57

Manually configure IPv6 TCP/IP parameters from the control panel 58
Link speed and duplex settings 58
Printer security features 59
Introduction 59
Security statements 59
Assign an administrator password 59
IP Security 60
Encryption support: HP High Performance Secure Hard Disks 61
Lock the formatter 61
Energy-conservation settings 61
Print with EconoMode 61
Set the sleep timer and configure the printer to use 1 watt or less of power 61
Set the sleep schedule 62
HP Web Jetadmin 62
Software and firmware updates 62
6 Solve problems 64
Control panel help system 64
Reset factory settings 64
Introduction 65
Method one: Reset factory settings from the printer control panel 65
Method two: Reset factory settings from the HP Embedded Web Server (network-connected printers only) 65
A “Cartridge is low” or “Cartridge is very low” message displays on the printer control panel or EWS 65
Change the “Very Low” settings 66
Order supplies 67
Printer does not pick up paper or misfeeds 67
Introduction 67
The printer does not pick up paper 67
The printer picks up multiple sheets of paper 69
Clear paper jams 72
Introduction 72
Paper jam locations 72
Auto-navigation for clearing paper jams 73
Experiencing frequent or recurring paper jams? 73
13.B2.D1 jam error in tray 1 74
13.B2.D2 jam error in tray 2 77
13.A3 jam error in tray 3 82
13.A4 jam error in tray 4 85
13.A5 jam error in tray 5 89
13.B2 jam error in top door 93
13.B4 jam error in rear door (fuser) 95
13.B9 jam error in rear door (fuser) 97
13.D3 jam error in duplexer 99
13.E1 jam error in the output bin 101
Resolving mono print quality problems 103

Introduction 103
Troubleshoot print quality 104
Solve wired network problems 116
Solve wireless network problems 116
Appendix A Service and support 117
HP limited warranty statement 117
UK, Ireland, and Malta 118
Austria, Belgium, Germany, Luxemburg. and Switzerland 119
Belgium, France, Luxemburg, and Switzerland 119
Italy 122
Spain 122
Denmark 123
Norway 123
Sweden 123
Portugal 124
Greece and Cyprus 124
Hungary 124
Czech Republic 125
Slovakia 125
Poland 125
Bulgaria 126
Romania 126
Belgium and the Netherlands 126
Finland 127
Slovenia 127
Croatia 127
Latvia 128
Lithuania 128
Estonia 128
Limited Warranty Statement for HP Print Cartridges, Imaging Drums, and Imaging Units for use with HP LaserJet Printers, HP Laser Printers and Samsung Branded Laser Printers 129
Long life consumable and maintenance kit limited warranty statement 129
HP policy on non-HP supplies 129
HP anticounterfeit Web site 130
Data stored on the toner cartridge 130
End User License Agreement 130
Customer self-repair warranty service 135
Customer support 135
Appendix B Environmental product stewardship program 136
Protecting the environment 136
Battery information 136
Battery Notice for Brazil (for printers with non-removable battery) 136
Chemical substances 137

Electronic hardware recycling 137
EPEAT 137
Material restrictions 137
Material Safety Data Sheet (MSDS) 137
Ozone production 137
Paper 137
Paper use 138
Plastics 138
Power consumption 138
HP LaserJet print supplies 138
Toner consumption 138
For more information 139
Brazil hardware recycling information 139
Substances Table (China) 140
SEPA Ecolabel User Information (China) 140
The regulation of the implementation on China energy label for printer, fax, and copier 141
Disposal of waste equipment by users (EU, UK, and India) 141
EU Microplastics 141
Product Power Data per European Union Commission Regulation 1275/2008 (EU) 141
India Battery Waste Management (BWM) Rules 142
Restriction on Hazardous Substances statement (India) 142
Substances Table (Taiwan) 143
WEEE (Turkey) 143

Appendix C Regulatory information 144

Regulatory statements 144
Regulatory model identification numbers 144
European Union & United Kingdom Regulatory Notice 144
European Union Consumer Laser Product 145
FCC regulations 145
Australia/New Zealand 145
Canada - Industry Canada ICES Compliance Statement 145
VCCI statement (Japan) 145
Power cord instructions 145
Power cord statement (Japan) 146
Product Safety Statements 146
EMC statement (China) 146
EMC statement (Korea) 146
EMC statement (Taiwan) 146
Laser safety 146
Laser statement for Finland 146
Nordic Statements (Denmark, Finland, Norway, Sweden) 147

GS statement (Germany) 147
Eurasian Conformity (Armenia, Belarus, Kazakhstan, Kyrgyzstan) 148
Taiwan BSMI USB Port (Walk-up) statement 148

Battery statements 149
Coin/button cell battery safety statements 149

Wireless statements 149
European Regulatory Notice 149
European regulatory notice 149
FCC compliance statement—United States 150
Australia 150
Brazil 150
Canada 150
Products with 5 GHz Operation Industry of Canada 150
Exposure to Radio Frequency Radiation (Canada) 151
China CMIIT Wireless Statement 151
Notice for use in Japan 151
Mexico statement 151
Taiwan statement 151
Taiwan NCC statement 151
Thailand Wireless Statement 151
China Short Range Device Statement 152

Index 153

1 Printer overview

Review the location of features on the printer, the physical and technical specifications of the printer, and where to locate setup information.

The following information is correct at the time of publication. For current information, see http://www.hp.com/support/ljX60000dn

For more information:

HP's all-inclusive help for the printer includes the following information:

- Install and configure
- Learn and use
- Solve problems
- Download software and firmware updates
- Join support forums
- Find warranty and regulatory information

Warning icons

Use caution if you see a warning icon on your HP printer, as indicated in the icon definitions.

Figure 1-1 **Caution: Electric shock**

Figure 1-2 **Caution: Hot surface**

Figure 1-3 **Caution: Keep body parts away from moving parts**

Figure 1-4 **Caution: Sharp edge in close proximity**

Figure 1-5 **Warning**

Potential shock hazard

Review this important safety information.

- Read and understand these safety statements to avoid an electrical shock hazard.
- Always follow basic safety precautions when using this product to reduce risk of injury from fire or electric shock.
- Read and understand all instructions in the user guide.
- Observe all warnings and instructions marked on the product.
- Use only a grounded electrical outlet when connecting the product to a power source. If you do not know whether the outlet is grounded, check with a qualified electrician.
- Do not touch the contacts on any of the sockets on the product. Replace damaged cords immediately.
- Unplug this product from wall outlets before cleaning.
- Do not install or use this product near water or when you are wet.
- Install the product securely on a stable surface.
- Install the product in a protected location where no one can step on or trip over the power cord.
- Do not place anything on top of the product. (For example, water, small metal or heavy objects, candles, lit cigarettes, etc.).

  This could result in electric shock or fire.

Printer views (X60357, X60357dn)

Identify certain parts of the printer and the control panel.

Printer front view

Locate features on the front of the printer.

Figure 1-6 **Printer front view**

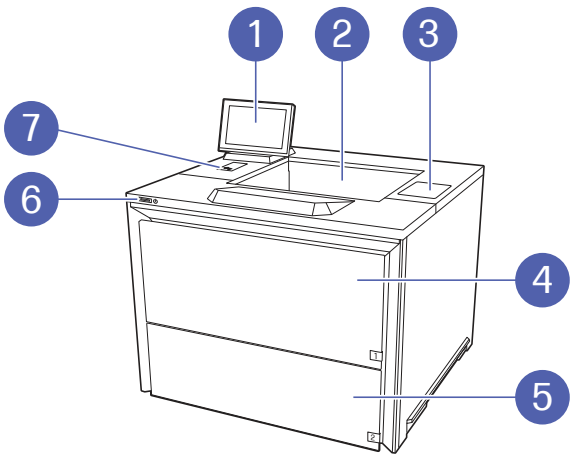

Table 1-1 Printer front components

Item	Description
1	Control panel with color touchscreen display (tilts up for easier viewing)
2	Output bin
3	Hardware Integration Pocket (HIP) for connecting accessory and third-party devices
4	Tray 1 (multipurpose tray)
5	Tray 2
6	On/Off button
7	Walk-up USB port

Printer rear view

Locate features on the rear of the printer.

Figure 1-7 Printer rear view

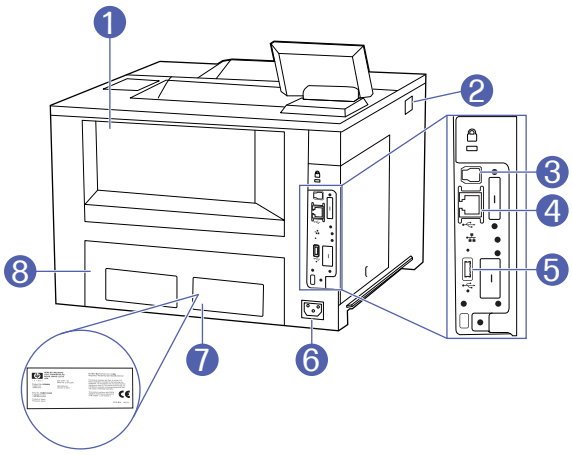

Table 1-2 Rear components

Item	Description
1	Rear door access (for clearing jams)
2	Toner cartridge door release button
3	SuperSpeed USB 3.0 interface port
4	Local area network (LAN) Ethernet (RJ-45) network port
5	SuperSpeed USB 3.0 host port (for job storage and private printing) NOTE: This port should remain covered when not in use.
6	Power connection
7	Serial number and product number label
8	Tray 2 legal extension cover

Control-panel view

The control panel provides access to the printer features and indicates the current status of the printer.

NOTE: Tilt the control panel for easier viewing.

The Home screen provides access to the printer features and indicates the current status of the printer.

NOTE: The features that appear on the Home screen can vary, depending on the printer configuration.

Figure 1-8 Color touchscreen control panel

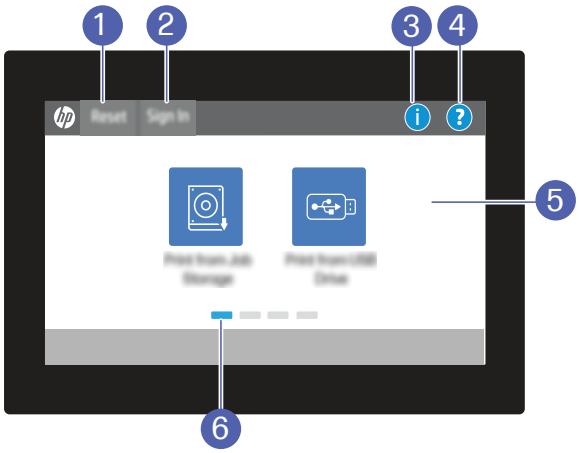

Table 1-3 Control panel components

Item	Control	Description
1	Reset button	The Reset button returns the printer to default settings and is always present if users are not logged in. The Reset button is not present when the Sign Out button is present. Touch the Reset button to resume and release jobs from the previous pause state and interrupt mode, reset the quick copy count in the copy count field, exit special modes, reset the display language and the keyboard layout.
2	Sign In or Sign Out button	Touch the Sign In button to access secured features. Touch the Sign Out button to sign out of the printer. The printer restores all options to the default settings. NOTE: This button displays only if the administrator has configured the printer to require permission for access to features.

Table 1-3 Control panel components (continued)

Item	Control	Description
3	Information button	• Display Language: Change the language setting for the current user session. • Sleep Mode: Place the printer into sleep mode. • Wi-Fi Direct: View information for how to connect directly to the printer using a phone, tablet, or other device with Wi-Fi (only available when the optional wireless accessory is installed). • Wireless: View or change wireless connection settings (only available when the optional wireless accessory is installed). • Ethernet: View or change Ethernet connection settings. • HP Web Services: View information to connect and print to the printer using HP Web Services. Touch the information button to access a screen that provides access to several types of printer information. Touch the buttons at the bottom of the screen for the following information:
4	Help button	Touch the Help button to open the embedded help system. The status line provides information about the overall printer status.
5	Applications area	Touch any of the icons to open the application. Swipe the screen sideways to access more applications. NOTE: The available applications vary by printer. The administrator can configure which applications appear and the order in which they appear.
6	Home-screen page indicator	Indicates the number of pages on the Home screen or in an application. The current page is highlighted. Swipe the screen sideways to scroll between pages.

How to use the touchscreen control panel

Perform the following actions to use the printer touchscreen control panel.

Table 1-4 Touchscreen control panel actions

Action	Description	Example
Touch 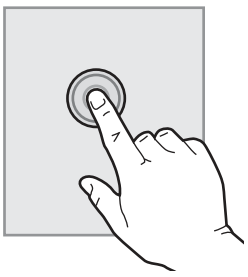	Touch an item on the screen to select that item or open that menu. Also, when scrolling through menus, briefly touch the screen to stop the scrolling.	Touch the Settings icon to open the Settings app.

Table 1-4 Touchscreen control panel actions (continued)

Action	Description	Example
Swipe 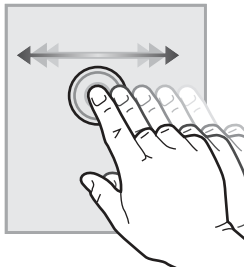	Touch the screen and then move your finger horizontally to scroll the screen sideways.	Swipe until the Settings app displays.
Scroll 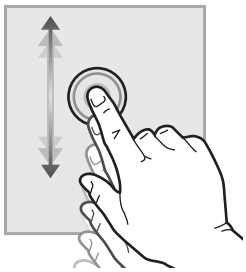	Touch the screen and then move your finger vertically to scroll the screen up and down. When scrolling through menus, briefly touch the screen to stop the scrolling.	Scroll through the Settings app.

Printer specifications

Determine the specifications for your printer model.

Technical specifications (X60357, X60357dn)

Review the technical specifications for the printer.

See http://www.hp.com/support/ljX60000dn for current information.

Product numbers for each model

- X60357 - #675T6AV
- X60357dn - #675T3A

Table 1-5 Paper handling specifications

Paper handling features	X60357dn	X60357
Tray 1 (100-sheet capacity)	✓	✓
Tray 2 (550-sheet capacity)	✓	✓
HP LaserJet 550 Sheet Paper Tray [1]	Optional	Can be Configured
HP LaserJet 3x550 Sheet Paper Feeder [2]	Optional	Can be Configured
HP LaserJet 550 Sheet Paper Tray with Storage Stand [3]	Optional	Can be Configured

Table 1-5 Paper handling specifications (continued)

Paper handling features	X60357dn	X60357
Automatic duplex printing	✓	✓

[1] The printer supports two optional 550 Sheet paper trays on a desktop.
[2] HP LaserJet 3x550 Sheet Paper Feeder has three 550 Sheet paper feeders on a caster stand and can support an additional 550 Sheet paper tray. (Maximum capacity of 550 Sheet paper trays: 4)
[3] HP LaserJet 550 Sheet Paper Tray with Storage Stand has one 550 Sheet paper tray with a storage stand and can support two additional 550 Sheet paper trays. (Maximum capacity of 550 Sheet paper trays: 3)

Table 1-6 Connectivity specifications

Connectivity features	X60357dn	X60357
10/100/1000 Ethernet LAN connection with IPv4 and IPv6	✓	✓
Wi-Fi accessory (Wi-Fi Direct and BLE): HP Jetdirect 3000w, 3100w, 3200w	Optional	Can be Configured
SuperSpeed USB 3.0 rear ports and Hi-Speed USB 2.0 front port for walk-up USB printing	✓	✓
Hardware integration pocket (HIP) for connecting accessory and third-party devices	✓	✓

Table 1-7 Print specifications

Print features	✓	X60357
Prints up to 57 pages per minute (ppm) on letter-sized paper, and 55 ppm on A4	✓	✓
Job storage and private printing	✓	✓

Table 1-8 Mobility specifications

Mobility features	X60357dn	X60357
AirPrint, Mopria	✓	✓

Table 1-9 Other specifications

Other features	X60357dn	X60357
4 GB DDR4 base memory	✓	✓
16 GB embedded Multi-Media Controller (eMMC)	✓	✓
500 GB Hard Disk Drive (HDD)	Optional	Can be Configured
512 GB Solid State Drive (SSD)	Optional	Can be Configured
Color touchscreen control panel	✓	✓
HP Trusted Platform Module (TPM) for encrypting all data that passes through the printer	✓	✓
Color panels	Optional	Can be Configured

Supported operating systems

The following information applies to the printer-specific Windows and HP print drivers for macOS and to the software installer.

Windows and macOS: Windows and Mac computers and Android and Apple mobile devices are supported with this printer.

1. Go to support.hp.com.
2. Enter the printer name to get the printer drivers, create an HP account, register the printer, and connect.

Linux: For information and print drivers for Linux, go to developers.hp.com/hp-linux-imaging-and-printing.

UNIX: For information and print drivers for UNIX, go to www.hp.com/go/unixmodelscripts.

Citrix Ready Kit Certification - Up to Citrix Server 7.18: For more information, go to citrixready.citrix.com.

Supported operating systems and print drivers

NOTE: HP software and drivers are no longer supported in Windows 7, Windows Server 2008, and Windows Server 2008 R2.

Table 1-10 **Supported operating systems and print drivers**

Operating system	Print driver installed (from the software on the web)
Windows 11, 64-bit Windows 10, 32-bit and 64-bit	The "HP PCL 6" printer-specific print driver is installed for this operating system as part of the software installation.
Windows Server 2022, 64-bit	The PCL 6 printer-specific print driver is available for download from the printer-support website. Download the driver, and then use the Microsoft Add Printer tool to install it.
Windows Server 2019, 64-bit	The PCL 6 printer-specific print driver is available for download from the printer-support website. Download the driver, and then use the Microsoft Add Printer tool to install it.
Windows Server 2016, 64-bit	The PCL 6 printer-specific print driver is available for download from the printer-support website. Download the driver, and then use the Microsoft Add Printer tool to install it.
Windows Server 2012 R2, 64-bit	The PCL 6 printer-specific print driver is available for download from the printer-support website. Download the driver, and then use the Microsoft Add Printer tool to install it.
Windows Server 2012, 64-bit	The PCL 6 printer-specific print driver is available for download from the printer-support website. Download the driver, and then use the Microsoft Add Printer tool to install it.
Chrome OS (Chromebook)	Chromebook devices are supported for printing using the HP Smart app, but they are not fully supported for printer setup.
macOS 14 Sonoma, macOS Ventura v13.0, macOS Monterey v12.0	To install the print driver, download HP Easy Start from 123.hp.com. Follow the steps provided to install the printer software and print driver.

NOTE: For a current list of supported operating systems, go to https://support.hp.com/ for HP's all-inclusive help for the printer.

NOTE: For driver support for this printer, go to https://support.hp.com/drivers/printers.

Minimum system requirements

Table 1-11 **Minimum system requirements for Windows®, macOS®, and mobile devices (iOS/Android)**

Windows 10, Windows 11 (Service Pack 1)	macOS 14 Sonoma, macOS Ventura v13.0, macOS Monterey v12.0	Mobile devices, iOS, Android
32-bit or 64-bit 2 GB hard drive Internet connection USB port	2 GB hard drive Internet connection	Router connection not required. NOTE: For more information, go to *Printers that can use mobile printing solutions*.

Mobile printing solutions

HP offers multiple mobile printing solutions to enable easy printing to an HP printer from a laptop, tablet, smartphone, or other mobile device.

To see the full list of mobile printing options available for your printer, go to *Printers that can use mobile printing solutions*.

NOTE: Update the printer firmware to ensure all mobile printing capabilities are supported.

- Wi-Fi Direct on wireless models
- AirPrint
- Android Printing
- HP Smart app

Printer dimensions (X60357, X60357dn)

Make sure your printer environment is large enough to accommodate the printer.

Figure 1-9 **Dimensions for the printer closed**

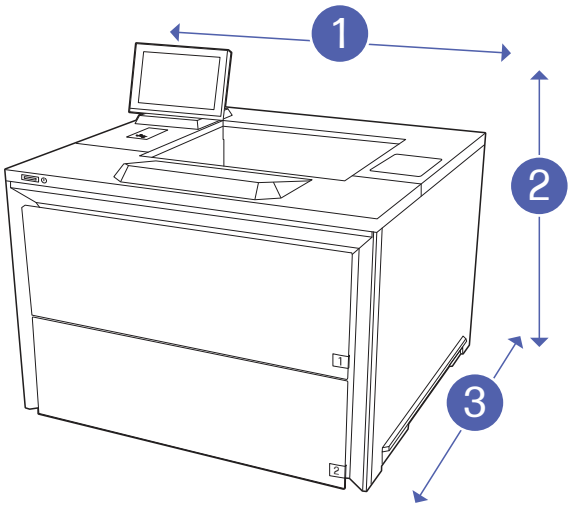

Figure 1-10 Dimensions for the printer opened

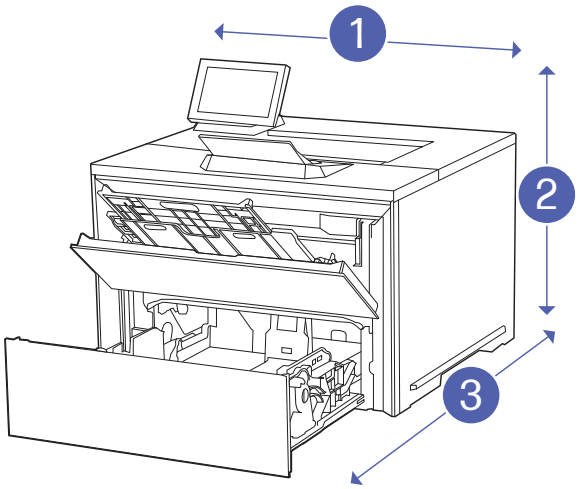

Table 1-12 Dimensions for the printer

Measurement	Printer fully closed	Printer fully opened
1. Width	400 mm (15.7 in)	400 mm (15.7 in)
2. Height	330 mm (13.0 in)	390 mm (15.4 in)
3. Depth	400 mm (15.7 in)	725 mm (28.5 in)
Weight (with cartridges)	11.8 kg (26 lb)	11.8 kg (26 lb)

Power consumption, electrical specifications, and acoustic emissions

In order to operate properly, the printer must be in an environment that meets certain power specifications.

See http://www.hp.com/support/IjX60000dn for current information.

⚠ CAUTION: Power requirements are based on the country/region where the printer is sold. Do not convert operating voltages. This will damage the printer and void the printer warranty.

Operating-environment range

In order to operate properly, the printer must be in an environment that meets certain specifications.

Table 1-13 Operating-environment specifications

Environment	Recommended	Storage
Temperature	15° to 27°C (59° to 80.6°F)	10° to 32.5°C (50° to 90.5°F)
Relative humidity	30% to 70% relative humidity (RH)	10% to 80% relative humidity (RH)

Printer hardware setup and software installation

For basic setup instructions, see the Hardware Installation Guide that came with the printer. For additional instructions, go to HP support on the web.

Go to http://www.hp.com/support/ljX60000dn for HP's all-inclusive help for the printer, which includes the following information:

- Install and configure
- Learn and use
- Solve problems
- Download software and firmware updates
- Join support forums
- Find warranty and regulatory information
- Find instructions about how to use the Microsoft Add Printer tool

2 Paper trays

Discover how to load and use the paper trays, including how to load special items such as envelopes and labels.

The following information is correct at the time of publication. For current information, see http://www.hp.com/support/ljX60000dn.

For more information:

HP's all-inclusive help for the printer includes the following information:

- Install and configure
- Learn and use
- Solve problems
- Download software and firmware updates
- Join support forums
- Find warranty and regulatory information

Use caution when loading the paper trays.

CAUTION: Do not extend more than one paper tray at a time.

Do not use paper tray as a step.

All trays must be closed while relocating/moving product.

Keep hands out of paper trays or drawers when closing.

If the printer has a keyboard, close keyboard tray when not in use.

Load paper to Tray 1 (multipurpose tray)

The following information describes how to load paper in Tray 1.

CAUTION: To avoid jams, never add or remove paper from Tray 1 during printing.

Load Tray 1 (multipurpose tray)

This tray holds up to 100 sheets of 75 grams per square meter (20 lb) paper, or 10 envelopes.

View a video of how to load paper in Tray 1

NOTE: Select the correct paper type in the print driver before printing.

1. Open Tray 1.

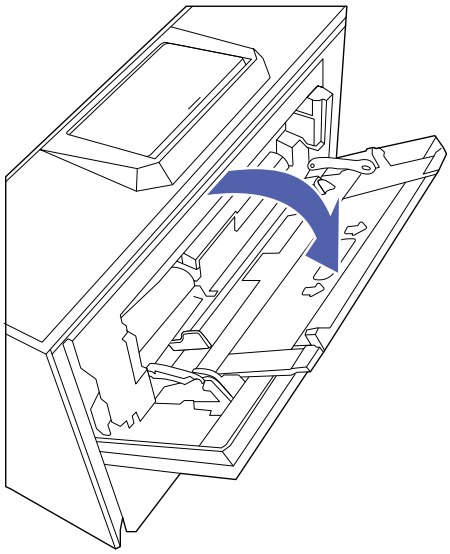

2. Pull out the tray extension to support the paper, if necessary.

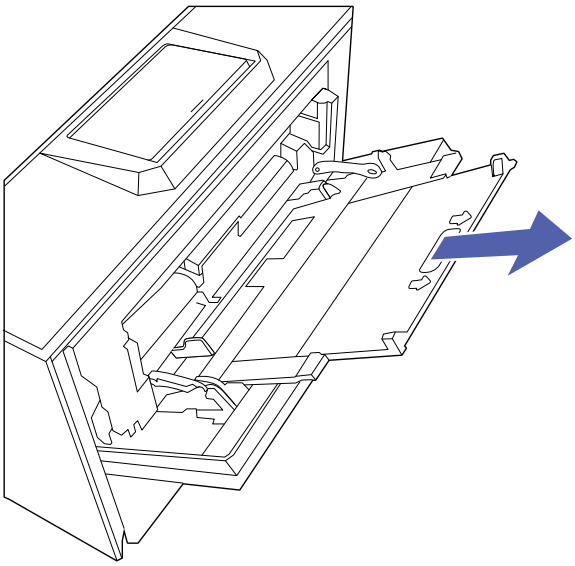

3. Use the adjustment latch to spread the paper guides outward.

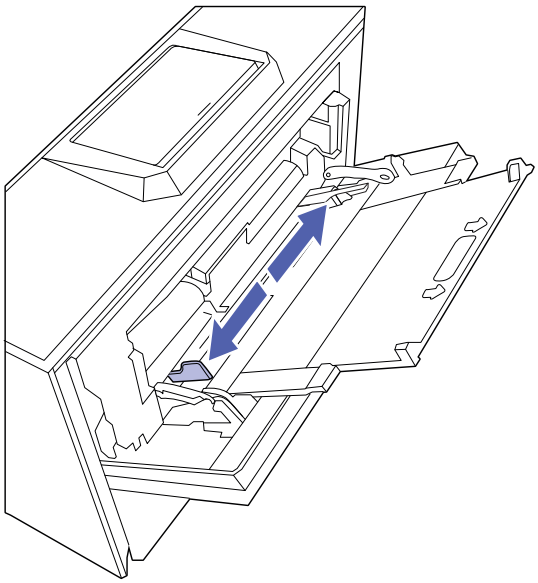

4. Load paper in the tray.

   Make sure that the paper fits under the three triangle fill line on the paper guides.

NOTE: The maximum stack height is 10 mm (0.4 in), or approximately 100 sheets of 75 grams per square meter (20 lb) paper.

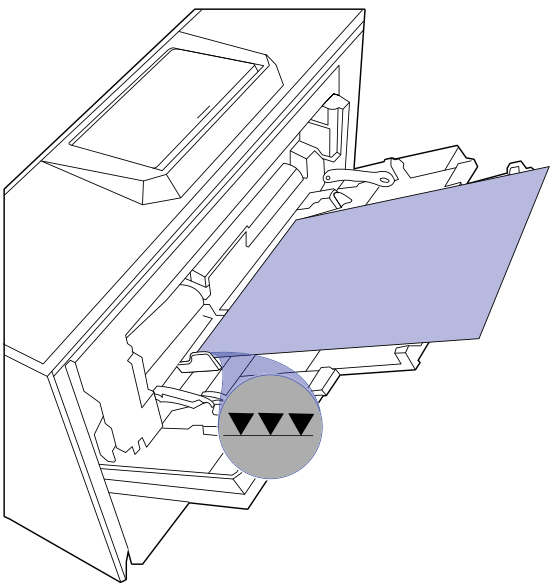

5. Using the adjustment latch, adjust the side guides so that they lightly touch the paper stack, but do not bend it.

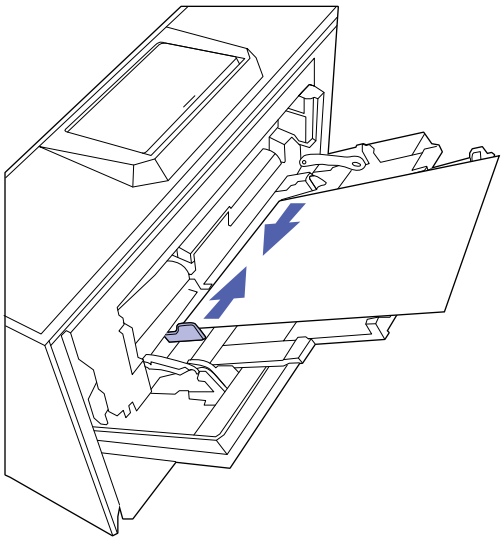

Tray 1 (multipurpose tray) paper orientation

Position paper correctly in Tray 1 (multipurpose tray) to ensure the best print quality.

Table 2-1 **Letterhead or pre-printed paper - Portrait**

Paper type	Output	How to load paper
Letterhead or pre-printed	1-sided printing	**Face-up** Bottom top edge leading into the printer. 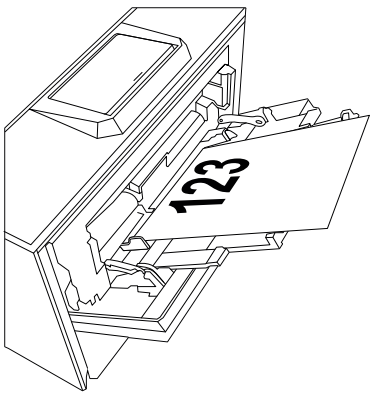

Table 2-1 **Letterhead or pre-printed paper - Portrait (continued)**

Paper type	Output	How to load paper
Letterhead or pre-printed	2-sided printing	**Face-down** Top edge leading into the printer. 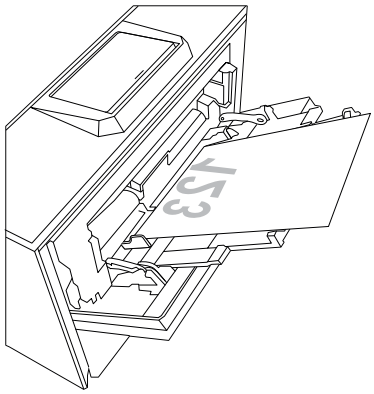
Letterhead or pre-printed, Pre-punched	1-sided printing	**Face-up** Holes toward the right side of the printer. 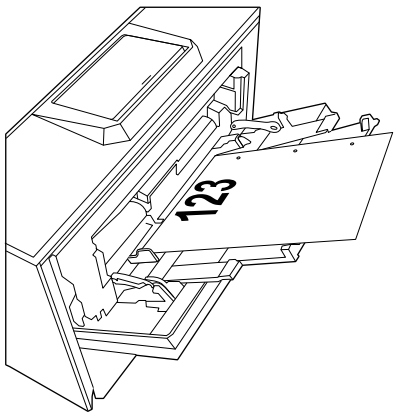
Letterhead or pre-printed, Pre-punched	2-sided printing	**Face-down** Holes toward the right side of the printer. 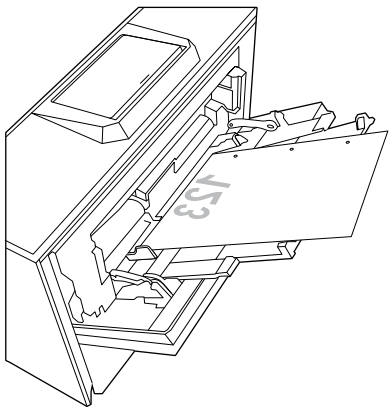

Table 2-2 **Letterhead or pre-printed paper - Landscape**

Duplex mode	How to load paper
1-sided printing	**Face-up** Pre-printed image face up and to the right leading into the printer. 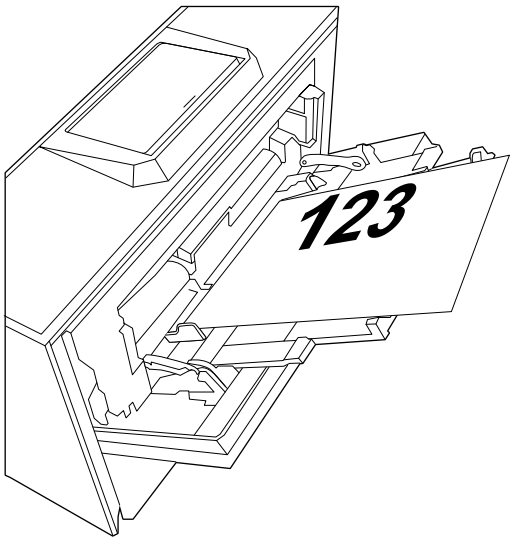
Automatic two-sided printing or with Alternative Letterhead Mode enabled	**Face-down** Pre-printed image face down and to the right leading into the printer. 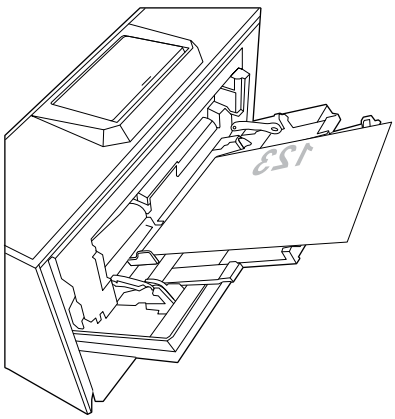

Table 2-3 **Pre-punched paper - Portrait**

Duplex mode	How to load paper
1-sided or 2-sided printing	**Punch holes right** Holes toward the right side of the printer. 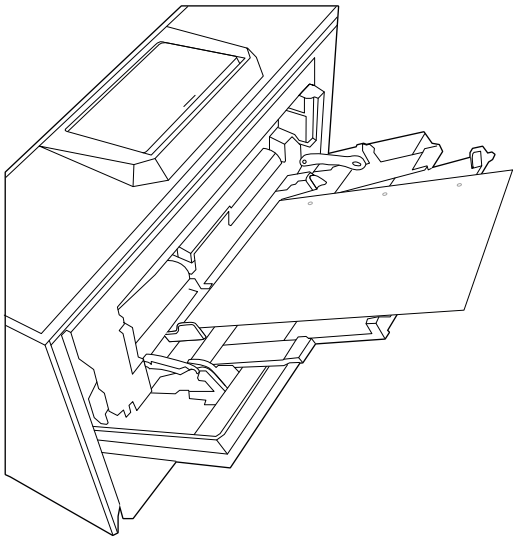

Load paper to Tray 2-5

Review the following information about loading paper to Tray 2, 3, 4, and 5.

Load Tray 2 or the optional 550-sheet trays

These trays hold up to 550 sheets of 75 grams per square meter (20 lb) paper.

View a video of how to load paper in Tray 2 and the optional trays

NOTE: The procedure to load paper to Tray 2 or the optional 550-sheet trays is the same. Only Tray 2 is shown here.

1. Open the tray.

   NOTE: Do not open any tray while it is in use.

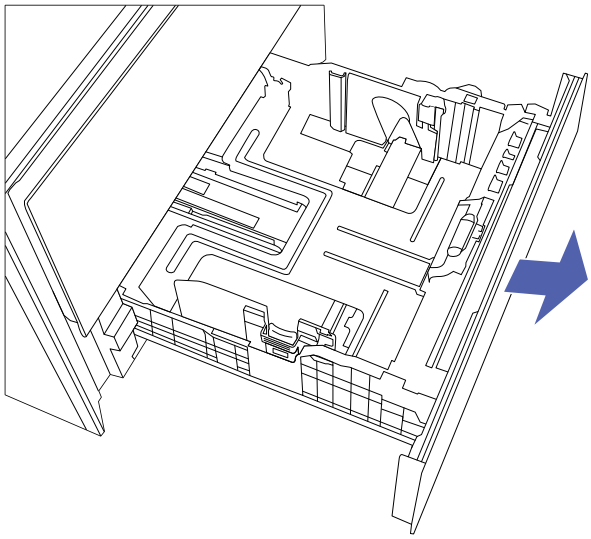

2. Before loading paper, adjust the paper-width guides by holding down the blue lock/unlock toggle switch on the rear paper-width guide, pinching the blue adjustment latch on the front paper-width guide, and then sliding the guides to the fully open position.

   Adjust the paper-length and paper-width guides to the size of the paper being used.

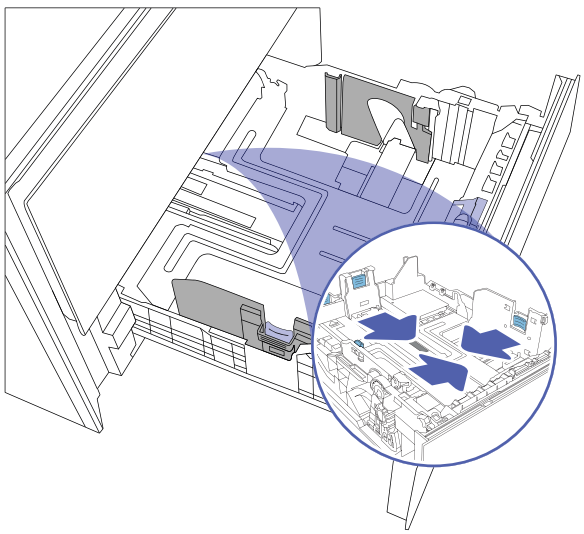

3. Load paper into the tray.

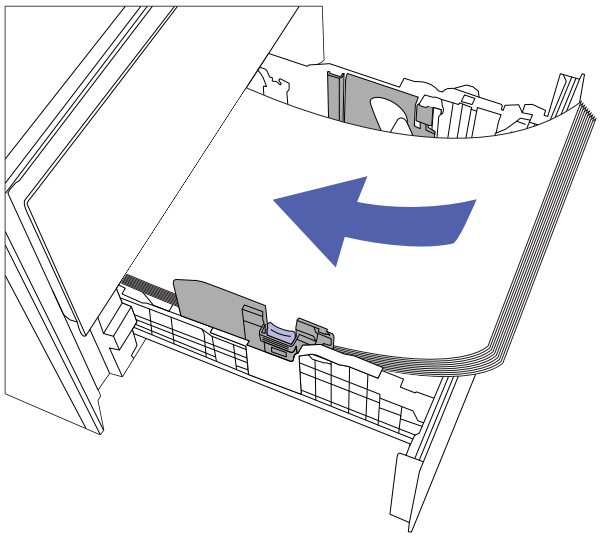

4. Check the paper to verify the guides lightly touch the stack, but do not bend it.

NOTE: Do not adjust the paper guides tightly against the paper stack. Adjust them to the indentations or markings in the tray.

NOTE: To prevent jams, adjust the paper guides to the correct size and do not overfill the tray. Be sure that the top of the stack is below the tray full indicator.

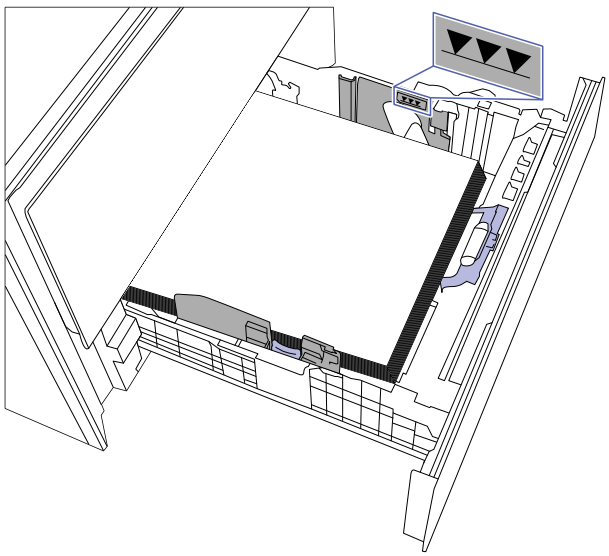

5. Close the tray.

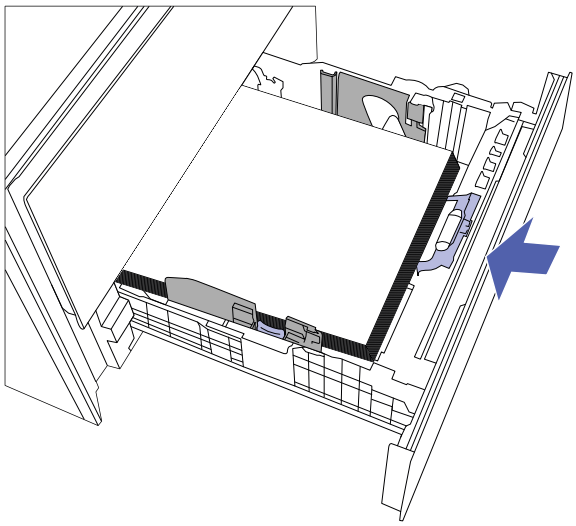

6. The tray configuration message displays on the printer control panel.

7. Select OK to accept the detected type and size, or select Modify to choose a different paper size or type.

   For custom-size paper, specify the X and Y dimensions for the paper when the prompt displays on the printer control panel.

Tray 2 and the optional 550-sheet trays paper orientation

Position paper correctly in Tray 2 and the optional 550-sheet trays to ensure the best print quality.

Table 2-4 **Letterhead or pre-printed paper - Portrait**

Paper type	Output	How to load paper
Letterhead or pre-printed	1-sided printing	**Face-down** Top edge toward the printer. 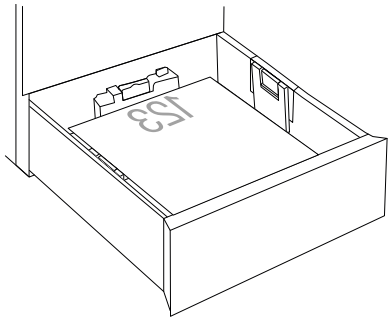

Table 2-4 Letterhead or pre-printed paper - Portrait (continued)

Paper type	Output	How to load paper
Letterhead or pre-printed	2-sided printing	**Face-up** Top edge away from the printer 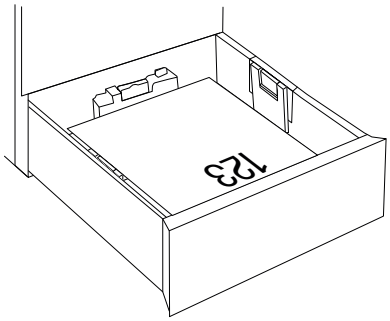
Pre-punched	1-sided printing	**Face-down** Holes toward the right side of the printer 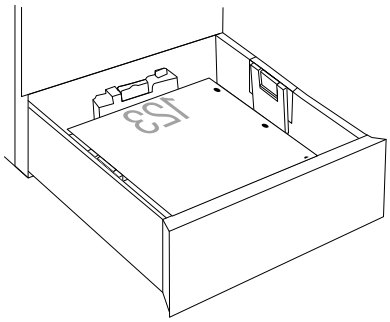
Pre-punched	2-sided printing	**Face-up** Holes toward the left side of the printer 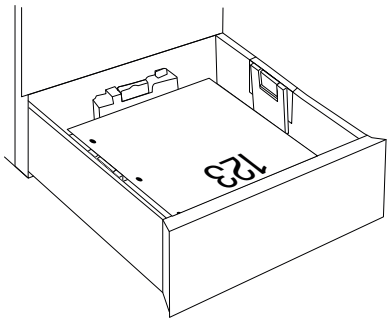

Table 2-5 **Letterhead or pre-printed paper - Landscape**

Duplex mode	How to load paper
1-sided printing	**Face-down** Letterhead to the left of the printer 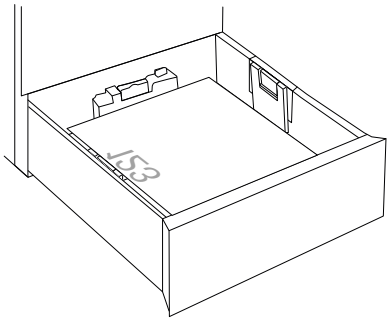
Automatic 2-sided printing or with Alternative Letterhead Mode enabled	**Face-up** Letterhead to the right of the printer 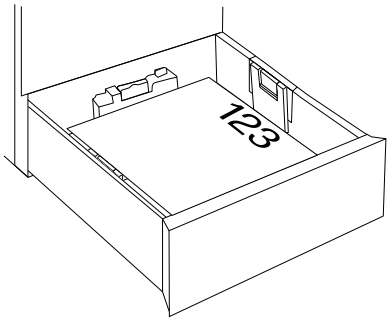

Table 2-6 **Prepunched paper - Portrait**

Duplex mode	How to load paper
1 or 2 sided printing	**Pre-punched to the right** Holes at the right of the tray 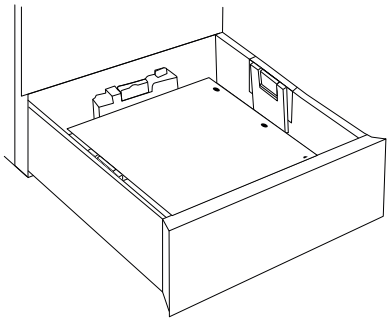

Use alternative letterhead mode

Use the Alternative Letterhead Mode feature to load letterhead or preprinted paper into the tray the same way for all jobs, whether printing to one side of the sheet of paper or to both sides. When using this mode, load paper as for automatic duplex printing.

Enable Alternative Letterhead Mode by using the printer control-panel menus

Use the Settings menu to enable Alternative Letterhead Mode.

1. From the Home screen on the printer control panel, open the Settings menu.
2. Open the following menus:
   a. Copy/Print or Print
   b. Manage Trays
   c. Alternative Letterhead Mode
3. Select On.

Load and print envelopes

To print on envelopes, use Tray 1 (multipurpose tray) or the optional envelope feeder kit tray.

In addition to the instructions provided in this document, you can view the following video of how to load envelopes in the printer.

View a video of how to load envelopes in the printer

Tray 1 (multipurpose tray) holds up to 10 envelopes.

The Envelope Feeder Kit holds up to 50 envelopes.

Print envelopes

To print envelopes using the manual feed option, follow these steps to select the correct settings in the print driver, and then load the envelopes into the tray after sending the print job to the printer.

1. From the software program, select the **Print** option.
2. Select the printer from the list of printers, and then click the **Properties** or **Preferences** button to open the print driver.

   NOTE: The name of the button varies for different software programs.

3. Click the **Paper/Quality** tab.
4. In the **Paper size** drop-down list, select the correct size for the envelopes.
5. In the **Paper type** drop-down list, select **Envelope**.
6. In the **Paper source** drop-down list, select **Manual feed**.
7. Click the **OK** button to close the **Document Properties** dialog box.
8. In the **Print** dialog box, click the **OK** button to print the job.

Tray 1 envelope orientation

When loading envelopes, load them according to the information in the following table.

Table 2-7 Envelope orientation

Tray	How to load
Tray 1	Face-up Short, postage-end leading into the printer 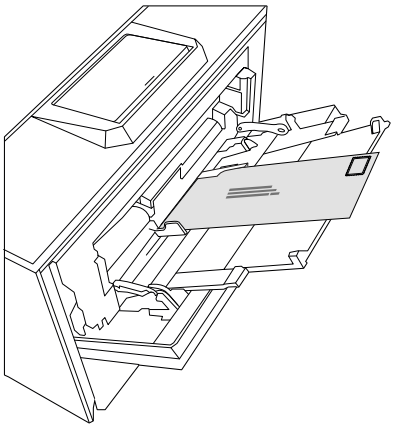 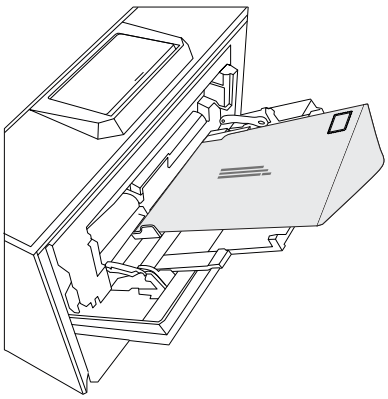

Envelope Feeder Kit envelope orientation

When loading envelopes, load them according to the information in the following table.

Table 2-8 Envelope orientation

Envelope feeder kit	How to load
Envelope Feeder Kit	Face-down Short, postage-end leading into the printer

Load and print labels

To print on sheets of labels, use only Tray 1 (multipurpose tray), Tray 2, Tray 3 and the optional 550-sheet trays.

Manually feed labels

Use the manual feed mode for Tray 1 (multipurpose tray) to print sheets of labels.

1. From the software program, select the **Print** option.
2. Select the printer from the list of printers, and then click the **Properties** or **Preferences** button to open the print driver.

   NOTE: The name of the button varies for different software programs.

3. Click the **Paper/Quality** tab.
4. In the **Paper size** drop-down list, select the correct size for the sheets of labels.
5. In the **Paper type** drop-down list, select **Labels**.
6. In the **Paper source** drop-down list, select **Manual feed**.
7. Click the **OK** button to close the **Document Properties** dialog box.
8. In the **Print** dialog box, click the **Print** button to print the job.

Label orientation

Labels need to be loaded in a specific manner in order to print correctly.

Table 2-9 **Label orientation**

Tray	How to load labels
Tray 1	Face-down Bottom edge leading into the printer 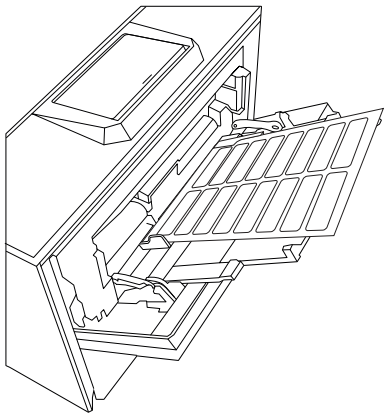

3 Supplies, accessories, and parts

Order supplies or accessories, replace the toner cartridges, or remove and replace another part.

The following information is correct at the time of publication. For current information, see http://www.hp.com/support/ljX60000dn.

HP's all-inclusive help for the printer includes the following information:

- Install and configure
- Learn and use
- Solve problems
- Download software and firmware updates
- Join support forums
- Find warranty and regulatory information

Order supplies, accessories, and parts

Find out how to obtain replacement supplies, accessories, and parts for the printer.

Ordering

Contact the managed service representative. Make sure to have the product model number, which appears on the product label on the back of the printer.

Replace the toner cartridge

To ensure optimal print quality, replace the toner cartridge when the printer alerts you that the toner is low or empty.

Toner cartridge information

This printer indicates when the toner cartridge level is low and very low. The actual toner cartridge life remaining can vary. Consider having a replacement cartridge available to install when print quality is no longer acceptable.

Continue printing with the current cartridge until redistributing the toner no longer yields acceptable print quality. To redistribute the toner, remove the toner cartridge from the printer and gently rock the cartridge back and forth end to end. For graphical representation, see the cartridge replacement instructions. Reinsert the toner cartridge into the printer, and then close the cover.

To purchase cartridges, contact the managed service representative. Make sure to have the product model number, which appears on the product label on the back of the printer. To check cartridge compatibility for the printer, go to https://learn-about-supplies.ext.hp.com/. Scroll to the bottom of the page and verify that the country/region is correct.

Do not remove the toner cartridge from its package until it is time to replace it.

CAUTION: To prevent damage to the toner cartridge, do not expose it to light for more than a few minutes. Cover the green imaging drum if the toner cartridge must be removed from the printer for an extended period of time.

CAUTION: If toner gets on clothing, wipe it off by using a dry cloth and wash the clothes in cold water. Hot water sets toner into fabric.

NOTE: Information about recycling used toner cartridges is in the toner-cartridge box.

Remove and replace the toner cartridge

Follow these steps to replace the toner cartridge.

View a video of how to replace a toner cartridge

1. Press the toner cartridge door release button on the left panel to open the toner cartridge door.

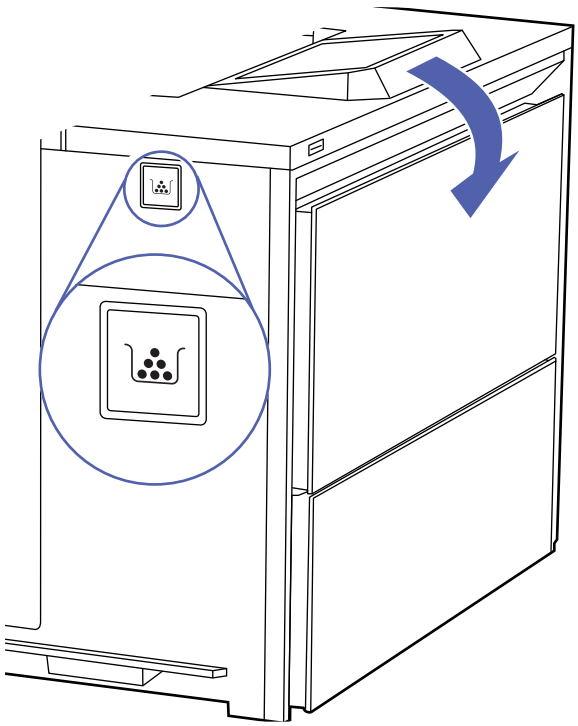

2. Grasp the handle of the toner cartridge and then pull the toner cartridge up and out to remove it from the printer.

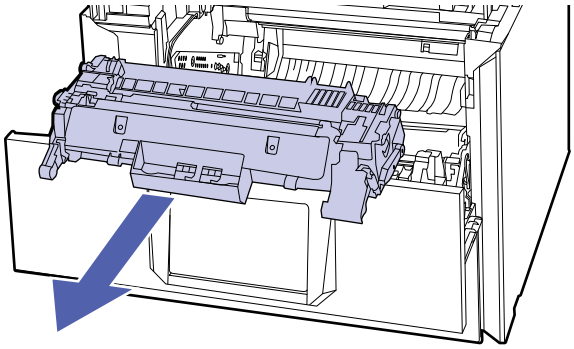

3. Remove the new toner cartridge from its package. Save all packaging for recycling the used toner cartridge.

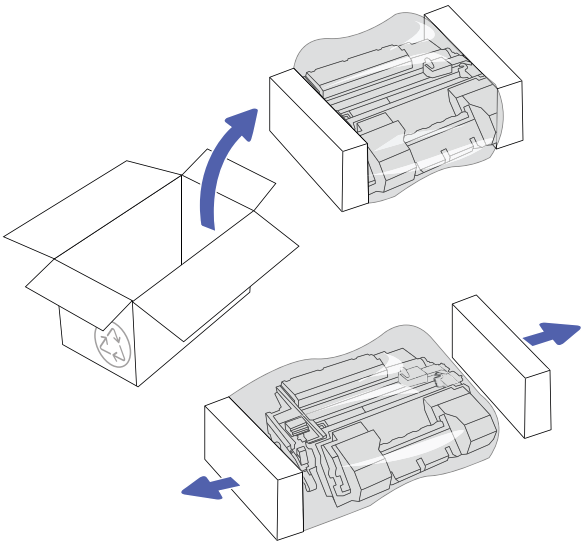

4. Hold the new toner cartridge at both ends and rock it back and forth, end to end, to distribute the toner evenly inside the cartridge.

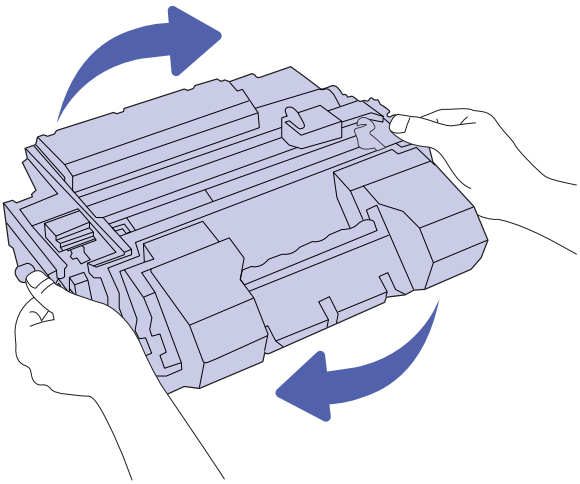

5. Align the new toner cartridge with its slot and insert it into the printer until it is firmly seated.

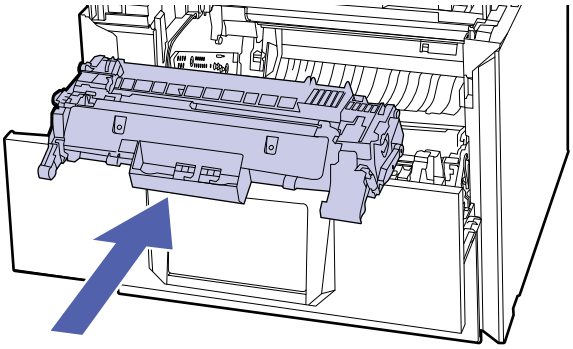

6. Close the toner cartridge door.

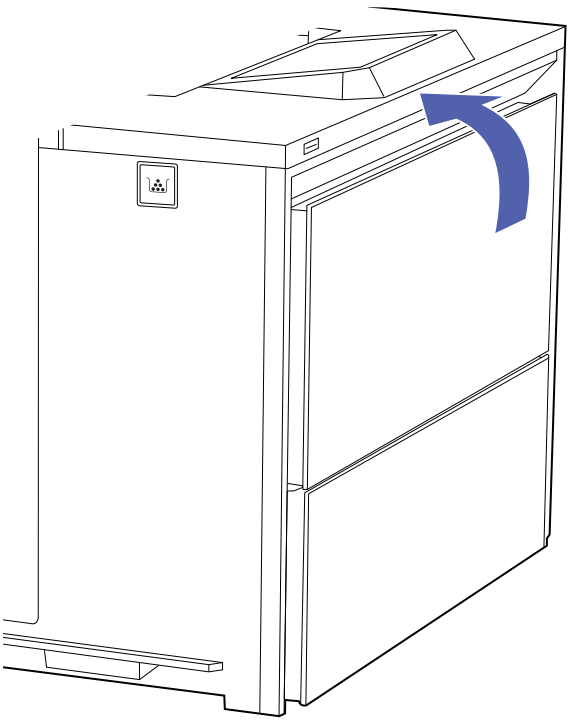

7. Pack the used toner cartridge into the box that the new toner cartridge came in. See the enclosed recycling guide for information about recycling.

   In the U.S. and Canada, a pre-paid shipping label is included in the box. In other countries/regions, go to www.hp.com/hprecycle to print a pre-paid shipping label.

   Adhere the pre-paid shipping label to the box, and return the used cartridge to HP for recycling.

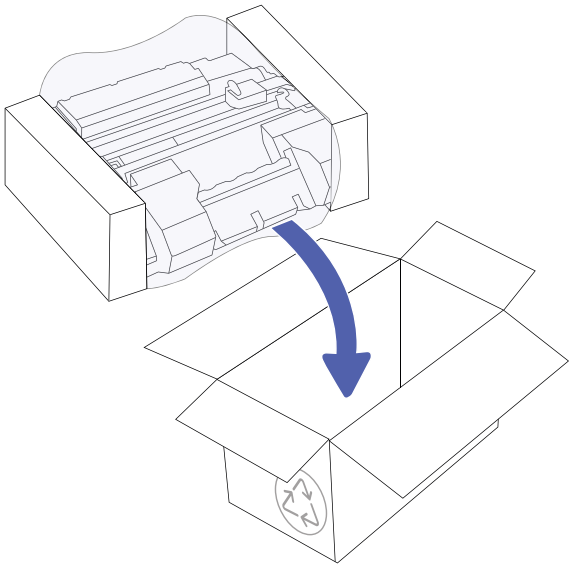

4 Print

Print using the software, or print from a mobile device or USB flash drive.

The following information is correct at the time of publication. For current information, see http://www.hp.com/support/IjX60000dn.

For more information:

HP's all-inclusive help for the printer includes the following information:

- Install and configure
- Learn and use
- Solve problems
- Download software and firmware updates
- Join support forums
- Find warranty and regulatory information

Print tasks (Windows)

Learn about common printing tasks for Windows users.

How to print (Windows)

Use the **Print** option from a software application to select the printer and basic options for your print job.

The following procedure describes the basic printing process for Windows.

1. From the software program, select the **Print** option.
2. Select the printer from the list of printers. To change settings, click the **Printer Properties** or **Preferences** button to open the print driver.

   NOTE: The name of the button varies for different software programs.

   For the HP PCL 6 driver, the HP AiO Printer Remote application downloads additional driver features when **More settings** is selected.

   NOTE: For more information, click the Help (?) button in the print driver.

3. Click the tabs in the print driver to configure the available options. For example, set the paper orientation on the **Finishing** tab, and set the paper source, paper type, paper size, and quality settings on the **Paper/Quality** tab.
4. Click the **OK** button to return to the **Print** dialog box. Select the number of copies to print from this screen.
5. Click the **Print** button to print the job.

Automatically print on both sides (Windows)

If your printer has an automatic duplexer installed, you can automatically print on both sides of the paper. Use a paper size and type supported by the duplexer.

1. From the software program, select the **Print** option.
2. Select the printer from the list of printers, and then click the **Printer Properties** or **Preferences** button to open the print driver.

   NOTE: The name of the button varies for different software programs.

   For the HP PCL 6 driver, the HP AiO Printer Remote application downloads additional driver features when **More settings** is selected.

3. Click the **Finishing** tab.
4. Select **Print on both sides**. Click **OK** to close the **Document Properties** dialog.
5. In the **Print** dialog, click **Print** to print the job.

Manually print on both sides (Windows)

Use this procedure for printers that do not have an automatic duplexer installed or to print on paper that the duplexer does not support.

1. From the software program, select the **Print** option.
2. Select the printer from the list of printers, and then click the **Printer Properties** or **Preferences** button to open the print driver.

   NOTE: The name of the button varies for different software programs.

   For the HP PCL 6 driver, the HP AiO Printer Remote application downloads additional driver features when **More settings** is selected.

3. Click the **Finishing** tab.
4. Select **Print on both sides (manually)**, and then click **OK** to close the **Document Properties** dialog.
5. In the **Print** dialog, click **Print** to print the first side of the job.
6. Retrieve the printed stack from the output bin, and place it in Tray 1.
7. If prompted, select the appropriate control panel button to continue.

Print multiple pages per sheet (Windows)

When you print from a software application using the **Print** option, you can select an option to print multiple pages on a single sheet of paper. For example, you might want to do this if you are printing a very large document and want to save paper.

1. From the software program, select the **Print** option.
2. Select the printer from the list of printers, and then click the **Printer Properties** or **Preferences** button to open the print driver.

   NOTE: The name of the button varies for different software programs.

For the HP PCL 6 driver, the HP AiO Printer Remote application downloads additional driver features when **More settings** is selected.

3. Click the **Finishing** tab.
4. Select the number of pages per sheet from the **Pages per sheet** drop-down.
5. Select the correct **Print page borders**, **Page order**, and **Orientation** options. Click **OK** to close the **Document Properties** dialog.
6. In the **Print** dialog, click **Print** to print the job.

Select the paper type (Windows)

When you print from a software application using the **Print** option, you can set the paper type you are using for your print job. For example, if your default paper type is Letter, but you are using a different paper type for a print job, select that specific paper type.

1. From the software program, select the **Print** option.
2. Select the printer from the list of printers, and then click the **Printer Properties** or **Preferences** button to open the print driver.

   NOTE: The name of the button varies for different software programs.

   For the HP PCL 6 driver, the HP AiO Printer Remote application downloads additional driver features when **More settings** is selected.

3. Click the **Paper/Quality** tab.
4. Select the paper type from the **Paper type** drop-down list.
5. Click **OK** to close the **Document Properties** dialog. In the **Print** dialog, click **Print** to print the job.

   If the tray needs to be configured, a tray configuration message displays on the printer control panel.

6. Load the tray with the specified type and size of paper, and then close the tray.
7. Touch the OK button to accept the detected type and size, or touch the Modify button to choose a different paper size or type.
8. Select the correct type and size, and then touch the OK button.

Additional print tasks

Locate information on the Web for performing common printing tasks.

Go to http://www.hp.com/support/ljX60000dn.

Instructions are available for print tasks, such as the following:

- Create and use printing shortcuts or presets
- Select the paper size, or use a custom paper size
- Select the page orientation
- Create a booklet

- Scale a document to fit a specific paper size
- Print the first or last pages of the document on different paper
- Print watermarks on a document

Print tasks (macOS)

Print using the HP printing software for macOS, including how to print on both sides or print multiple pages per sheet.

How to print (macOS)

Use the **Print** option from a software application to select the printer and basic options for your print job.

The following procedure describes the basic printing process for macOS.

1. Click the **File** menu, and then click the **Print** option.
2. Select the printer.
3. Click **Show Details** or **Copies & Pages**, and then select other menus to adjust the print settings.

   NOTE: The name of the item varies for different software programs.

4. Click the **Print** button.

Automatically print on both sides (macOS)

If your printer has an automatic duplexer installed, you can automatically print on both sides of the paper. Use a paper size and type supported by the duplexer.

NOTE: This information applies to printers that include an automatic duplexer.

NOTE: This feature is available if you install the HP print driver. It might not be available if you are using AirPrint®.

1. Click the **File** menu, and then click the **Print** option.
2. Select the printer.
3. Click **Show Details** or **Copies & Pages**, and then click the **Layout** menu.

   macOS 12.0 Monterey and later: Click **Show Details**, click **Two-Sided**, and then click the **Layout** menu.

   NOTE: The name of the item varies for different software programs.

4. Select a binding option from the **Two-Sided** drop-down list.
5. Click the **Print** button.

Manually print on both sides (macOS)

Use this procedure for printers that do not have an automatic duplexer installed or to print on paper that the duplexer does not support.

NOTE: This feature is available if you install the HP print driver. It might not be available if you are using AirPrint.

1. Click the **File** menu, and then click the **Print** option.
2. Select the printer.
3. Click **Show Details** or **Copies & Pages**, and then click the **Manual Duplex** menu.

   NOTE: The name of the item varies for different software programs.

4. Click the **Manual Duplex** box, and select a binding option.
5. Click the **Print** button.
6. Go to the printer and remove any blank paper that is in Tray 1.
7. Retrieve the printed stack from the output bin and place it with the printed-side facing down in the input tray.
8. If prompted, touch the appropriate control panel button to continue.

Print multiple pages per sheet (macOS)

When you print from a software application using the **Print** option, you can select an option to print multiple pages on a single sheet of paper. For example, you might want to do this if you are printing a very large document and want to save paper.

1. Click the **File** menu, and then click the **Print** option.
2. Select the printer.
3. Click **Show Details** or **Copies & Pages**, and then click the **Layout** menu.

   NOTE: The name of the item varies for different software programs.

4. From the **Pages per Sheet** drop-down list, select the number of pages that you want to print on each sheet.
5. In the **Layout Direction** area, select the order and placement of the pages on the sheet.
6. From the **Borders** menu, select the type of border to print around each page on the sheet.
7. Click the **Print** button.

Select the paper type (macOS)

When you print from a software application using the **Print** option, you can set the paper type you are using for your print job. For example, if your default paper type is Letter, but you are using a different paper type for a print job, select that specific paper type.

1. Click the **File** menu, and then click the **Print** option.
2. Select the printer.

3. Click **Show Details** or **Copies & Pages**, and then click the **Media & Quality** menu or the **Paper/Quality** menu.

NOTE: The name of the item varies for different software programs.

4. Select from the **Media & Quality** or **Paper/Quality** options.

NOTE: This list contains the master set of options available. Some options are not available on all printers.

- **Media Type**: Select the option for the type of paper for the print job.
- **Print Quality** or **Quality**: Select the resolution level for the print job.
- **Edge-To-Edge Printing**: Select this option to print close to the paper edges.

5. Click the **Print** button.

Additional print tasks

Locate information on the Web for performing common printing tasks.

Go to http://www.hp.com/support/ljX60000dn.

Instructions are available for print tasks, such as the following:

- Create and use printing shortcuts or presets
- Select the paper size, or use a custom paper size
- Select the page orientation
- Create a booklet
- Scale a document to fit a specific paper size
- Print the first or last pages of the document on different paper
- Print watermarks on a document

Store print jobs on the printer to print later or print privately

Store print jobs in the printer memory for printing at a later time.

Introduction

The following information provides procedures for creating and printing documents that are stored on the USB flash drive. These jobs can be printed at a later time or printed privately.

Create a stored job (Windows)

Store jobs on the USB flash drive for private or delayed printing.

1. From the software program, select the **Print** option.
2. Select the printer from the list of printers, and then select **Printer Properties** or **Preferences**.

NOTE: The name of the button varies for different software programs.

For the HP PCL 6 driver, the HP AiO Printer Remote application downloads additional driver features when **More settings** is selected.

3. Click the **Job Storage** tab.
4. Select a **Job Storage Mode** option:
   - **Proof and Hold**: Print and proof one copy of a job, and then print more copies.
   - **Personal Job**: The job does not print until you request it at the printer control panel. For this job-storage mode, you can select one of the **Make Job Private/Secure** options. If you assign a personal identification number (PIN) to the job, you must provide the required PIN at the control panel. If you encrypt the job, you must provide the required password at the control panel. The print job is deleted from memory after it prints and is lost if the printer loses power.
   - **Quick Copy**: Print the requested number of copies of a job and store a copy of the job in the printer memory so you can print it again later.
   - **Stored Job**: Store a job on the printer and allow other users to print the job at any time. For this job-storage mode, you can select one of the **Make Job Private/Secure** options. If you assign a personal identification number (PIN) to the job, the person who prints the job must provide the required PIN at the control panel. If you encrypt the job, the person who prints the job must provide the required password at the control panel.
5. To use a custom user name or job name, click the **Custom** button, and then enter the user name or the job name.

   Select which option to use if another stored job already has that name:
   - **Use Job Name + (1-99)**: Append a unique number to the end of the job name.
   - **Replace Existing File**: Overwrite the existing stored job with the new one.
6. Click the **OK** button to close the **Document Properties** dialog box. In the **Print** dialog box, click the **Print** button to print the job.

Create a stored job (macOS)

Store jobs on the USB flash drive for private or delayed printing.

1. Click the **File** menu, and then click the **Print** option.
2. In the **Printer** menu, select the printer.
3. Click **Show Details** or **Copies & Pages**, and then click the **Job Storage** menu.

NOTE: If the **Job Storage** menu is not showing, follow the instructions in the "Disable or enable job storage feature" section to activate the menu.

4. In the **Mode** drop-down list, select the type of stored job.
   - **Proof and Hold**: Print and proof one copy of a job, and then print more copies. The first copy prints immediately. Printing of the subsequent copies must be initiated from the device's front control panel. For example, if 10 copies are sent, one copy prints immediately, and the other nine copies will print when the job is retrieved. The job is deleted after all copies are printed.

- **Personal Job**: The job does not print until someone requests it at the printer control panel. If the job has a personal identification number (PIN), provide the required PIN at the control panel. The print job is deleted from memory after it prints.
- **Quick Copy**: Print the requested number of copies of a job and store a copy of the job in the printer memory to print it again later. The job is deleted manually or by the job retention schedule.
- **Stored Job**: Store a job on the printer and allow other users to print the job at any time. If the job has a personal identification number (PIN), the person who prints the job must provide the required PIN at the control panel. The job is deleted manually or by the job retention schedule.

5. To use a custom user name or job name, click the **Custom** button, and then enter the user name or the job name.

NOTE: **macOS 12.0 Monterey and above**: The print driver no longer includes the **Custom** button. Use the options below the **Mode** drop-down list to set up the saved job.

Select which option to use if another stored job already has that name.

- **Use Job Name + (1-99)**: Append a unique number to the end of the job name.
- **Replace Existing File**: Overwrite the existing stored job with the new one.

6. If you selected the **Stored Job** or **Personal Job** option in the **Mode** drop-down list, you can protect the job with a PIN. Type a 4-digit number in the **Use PIN to Print** field. When other people attempt to print this job, the printer prompts them to enter this PIN.
7. Click the **Print** button to process the job.

Print a stored job

Use the following procedure to print a job that is stored in the printer memory.

1. From the Home screen on the printer control panel, navigate to the Print application, and then select the Print icon.
2. Select Print from Job Storage.
3. Select the name of the folder where the job is stored, or select Choose to see the folder list.
4. Select the name of the job. If the job is private or encrypted, enter the PIN or password.
5. To adjust the number of copies, select the number of copies field. Use the keypad to enter the number of copies to print.
6. Select Start or Print to print the job.

Delete a stored job

You can delete documents that have been saved to the printer when they are no longer needed. You can also adjust the maximum number of jobs for the printer to store.

Delete a job that is stored on the printer

Use the control panel to delete a job that is stored in the printer memory.

1. From the Home screen on the printer control panel, navigate to the Print application, and then select the Print icon.

2. Select Print from Job Storage.
3. Select the name of the folder where the job is stored or select Choose to see the folder list.
4. Select the name of the job. If the job is private or encrypted, enter the PIN or password.
5. Select the Trash button to delete the job.

Change the job storage limit

When a new job is stored in the printer memory, the printer overwrites any previous jobs with the same user and job name. If a job is not already stored under the same user and job name, and the printer needs additional space, the printer might delete other stored jobs starting with the oldest.

To change the number of jobs that the printer can store, complete the following procedure:

1. From the Home screen on the printer control panel, navigate to the Settings application, and then select the Settings icon.
2. Open the following menus:
   a. Copy/Print or Print
   b. Manage Stored Jobs
   c. Temporary Job Storage Limit
3. Use the keypad to enter the number of jobs that the printer stores.
4. Select OK or Done to save the setting.

Information sent to printer for Job Accounting purposes

Printing jobs sent from drivers on the client (e.g., PC) may send personally identifiable information to HP's Printing and Imaging devices. This information may include, but is not limited to, user name and client name from which the job originated that may be used for job accounting purposes, as determined by the Administrator of the printing device. This same information may also be stored with the job on the mass storage device (e.g., disk drive) of the printing device when using the job storage feature.

Mobile printing

Mobile printing solutions enable easy printing to an HP printer from a laptop, tablet, smartphone, or other mobile device.

Mobile printing solutions

Learn what HP offers for mobile printing solutions.

HP offers multiple mobile printing solutions to enable easy printing to an HP printer from a laptop, tablet, smartphone, or other mobile device. To see the full list and to determine the best choice, go to Wireless printing from a laptop, phone, or tablet.

- Wi-Fi Direct
- HP All-in-One Remote app for iOS and Android devices
- AirPrint

- Android Printing

Wi-Fi, Wi-Fi Direct Print, NFC, and BLE printing

HP provides Wi-Fi Direct Print, Near Field Communication (NFC), and Bluetooth Low Energy (BLE) printing for printers with a supported HP Jetdirect 3100w BLE/NFC/Wireless Accessory. This is an optional accessory.

These features enable Wi-Fi capable (mobile) devices to make a wireless network connection directly to the printer without using a wireless router.

The printer does not need to be connected to the network for this mobile walk-up printing to work.

Use Wi-Fi Direct Print to print wirelessly from the following devices:

- iPhone, iPad, or iPod touch using Apple AirPrint
- Android mobile devices using the Android embedded print solution

For more information on wireless printing, go to www.hp.com/go/LaserJetMobilePrinting.

NFC, BLE, and Wi-Fi Direct Print capabilities can be enabled or disabled from the printer control panel.

Enable wireless printing

To print wirelessly from mobile devices, Wi-Fi Direct must be turned on.

1. From the Home screen on the printer control panel, select the Settings menu.
2. Select the following menus:
   a. Networking
   b. Wi-Fi Direct
   c. Status
3. Select On, and then select OK to enable wireless printing.

Change the Wi-Fi Direct name

Change the printer Wi-Fi Direct name using the HP Embedded Web Server (EWS).

NOTE: In environments where more than one model of the same printer is installed, it might be helpful to provide each printer a unique Wi-Fi Direct Name for easier printer identification for HP Wi-Fi Direct printing. The Wireless network names, e.g., Wireless, Wi-Fi Direct, etc. are available on the Information screen by selecting the Information icon , and then selecting the Wi-Fi Direct icon .

Complete the following procedure to change the printer Wi-Fi Direct name:

1. From the Home screen on the printer control panel, select the Settings icon.
2. Open the following menus:
   a. Networking
   b. Wi-Fi Direct
   c. Wi-Fi Direct Name

3. Use the keypad to change the name in the Wi-Fi Direct Name text field, and then select OK.

AirPrint

Direct printing using Apple's AirPrint is supported for iOS and from Mac computers running macOS 10.7 Lion and newer.

Use AirPrint to print directly to the printer from an iPad, iPhone (3GS or later), or iPod touch (third generation or later) in the following mobile applications:

- Mail
- Photos
- Safari
- iBooks
- Select third-party applications

To use AirPrint, the printer must be connected to the same network (sub-net) as the Apple device. For more information about using AirPrint and about which HP printers are compatible with AirPrint, go to http://www.hp.com/go/LaserJetMobilePrinting.

NOTE: Before using AirPrint with a USB connection, verify the version number. AirPrint versions 1.3 and earlier do not support USB connections.

Android embedded printing

HP's built-in print solution for Android and Kindle enables mobile devices to automatically find and print to HP printers that are either on a network or within wireless range for Wi-Fi Direct printing.

The print solution is built into many versions of the operating system.

NOTE: If printing is not available on your device, go to the Google Play > Android apps and install the HP Print Service Plugin.

For more information on how to use Android embedded printing and which Android devices are supported, go to http://www.hp.com/go/LaserJetMobilePrinting.

Print from a USB flash drive

This printer features easy-access USB printing to print files without a computer.

The printer accepts standard USB flash drives in the USB port near the control panel. It supports the following types of files:

- .pdf
- .prn
- .pcl
- .ps
- .cht

Enable the USB port for printing

The USB port is disabled by default. Before using this feature, enable the USB port.

Use one of the following methods to enable the port:

Method one: Enable the USB port from the printer control panel

Use the printer control panel to enable the USB port for printing.

1. From the Home screen on the printer control panel, navigate to the Settings application, and then select the Settings icon.
2. Open the following menus:
   a. Copy/Print or Print
   b. Enable Device USB
3. Select Enable Print from USB Drive.

Method two: Enable the USB port from the HP Embedded Web Server (network-connected printers only)

Use the printer control panel to enable the USB port for printing.

1. Open the HP Embedded Web Server (EWS):
   a. On the printer control panel, press the Information button, and then use the arrow keys to select the Ethernet menu. Press the OK button to open the menu and display the IP address or host name.
   b. Open a web browser, and in the address line, type the IP address or host name exactly as it displays on the printer control panel. Press the Enter key on the computer keyboard. The EWS opens.

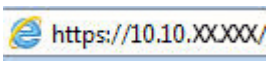

   NOTE: If the web browser displays a message indicating that accessing the website might not be safe, select the option to continue to the website. Accessing this website will not harm the computer.
2. Select the **Copy/Print** tab for MFP models or the **Print** tab for SFP models.
3. In the left menu, select **Print from USB Drive Settings**.
4. Select **Enable Print from USB Drive**.
5. Click **Apply**.

Print USB documents (keypad control panel)

1. Insert the USB flash drive into the easy-access USB port.

NOTE: The port might be covered. For some printers, the cover flips open. For other printers, pull the cover straight out to remove it.

2. From the Home screen on the printer control panel, select USB Drive.

3. Select Choose, select the name of the document to print, and then select Select.

NOTE: The document might be in a folder. Open folders as necessary.

4. To adjust the number of copies, select the field for the number of copies. Use the keypad to enter the number of copies to print.

5. Select the Start icon to print the document.

Print using high-speed USB 2.0 port (wired)

Enable the high-speed USB 2.0 port for wired USB printing. The port is located in the interface ports area and is disabled by default.

Use one of the following methods to enable the high-speed USB 2.0 port. Once the port is enabled, install the product software in order to print using this port.

Method one: Enable the high-speed USB 2.0 port from the printer control panel menus

Use the control panel to enable the port.

1. From the Home screen on the printer control panel, navigate to the Settings application, and then select the Settings icon.

2. Open the following menus:

   a. General

   b. Enable Device USB

3. Select the Enabled option.

Method two: Enable the high-speed USB 2.0 port from the HP Embedded Web Server (network-connected printers only)

Use the HP EWS to enable the port.

1. Open the HP Embedded Web Server (EWS):

   a. On the printer control panel, press the Information button, and then use the arrow keys to select the Ethernet menu. Press the OK button to open the menu and display the IP address or host name.

   b. Open a web browser, and in the address line, type the IP address or host name exactly as it displays on the printer control panel. Press the Enter key on the computer keyboard. The EWS opens.

   https://10.10.XXXXX/

   NOTE: If the web browser displays a message indicating that accessing the website might not be safe, select the option to continue to the website. Accessing this website will not harm the computer.

2. Select the **Security** tab.
3. On the left side of the screen, select **General Security**.
4. Scroll down to the **Hardware Ports** and select the check box to enable both of the items:
   - **Enable Device USB**
   - **Enable Host USB plug and play**
5. Click **Apply**.

Print using the SuperSpeed USB 3.0 port (wired)

Enable the SuperSpeed USB 3.0 port for wired USB printing. The port is located in the interface ports area and is disabled by default.

Use one of the following methods to enable the SuperSpeed USB 3.0 port. Once the port is enabled, install the product software in order to print using this port.

Method one: Enable the SuperSpeed USB 3.0 port from the printer control panel menus

Use the control panel to enable the port.

1. From the Home screen on the printer control panel, navigate to the Settings application, and then select the Settings icon.
2. Open the following menus:
   a. General
   b. Enable Device USB
3. Select the Enabled option.

Method two: Enable the SuperSpeed USB 3.0 port from the HP Embedded Web Server (network-connected printers only)

Use the HP EWS to enable the port.

1. Find the printer IP address. On the printer control panel, select the Information button , and then select the Network icon to display the IP address or host name.
2. Open a web browser, and in the address line, type the IP address exactly as it displays on the printer control panel. Press the `Enter` key on the computer keyboard. The EWS opens.

   https://10.10.XX.XXX

   NOTE: If the web browser displays a message indicating that accessing the website might not be safe, select the option to continue to the website. Accessing this website will not harm the computer.

3. Select the **Security** tab.
4. On the left side of the screen, select **General Security**.

5. Scroll down to the **Hardware Ports** and select the following check boxes:
   a. **Enable Device USB**
   b. **Enable Host USB plug and play**
6. Click **Apply**.

5 Manage the printer

Utilize management tools, configure security and energy-conservation settings, and manage firmware updates for the printer.

The following information is correct at the time of publication. For current information, see http://www.hp.com/support/ljX60000dn.

For more information:

HP's all-inclusive help for the printer includes the following information:

- Install and configure
- Learn and use
- Solve problems
- Download software and firmware updates
- Join support forums
- Find warranty and regulatory information

Advanced configuration with the HP Embedded Web Server (EWS)

Use the HP Embedded Web Server to manage advanced printing functions.

Introduction

Use the HP Embedded Web Server to manage printing functions from a computer instead of the printer control panel.

- View printer status information
- Determine the remaining life for all supplies and order new ones
- View and change tray configurations
- View and change the printer control-panel menu configuration
- View and print internal pages
- Receive notification of printer and supplies events
- View and change network configuration

The HP Embedded Web Server works when the printer is connected to an IP-based network. The HP Embedded Web Server does not support IPX-based printer connections. Internet access is not needed to open and use the HP Embedded Web Server.

When the printer is connected to the network, the HP Embedded Web Server is automatically available.

NOTE: The HP Embedded Web Server is not accessible beyond the network firewall.

How to access the HP Embedded Web Server (EWS)

Use the following steps to open the Embedded Web Server.

1. From the Home screen on the printer control panel, touch the Information icon, and then touch the Ethernet icon to display the IP address or host name.
2. On your computer, open a web browser, and in the address line, type the IP address or host name exactly as it displays on the printer control panel. Press the `Enter` key on the computer keyboard.

   https://10.10.XX.XXX

   NOTE: If the web browser displays a message indicating that accessing the website might not be safe, select the option to continue to the website. Accessing this website will not harm the computer.

   The EWS web page opens.

To use the HP Embedded Web Server, the browser must meet the following requirements:

Windows 10 or greater

- Microsoft Edge (version 93 or greater)
- Google Chrome (version 34.x or greater)
- Firefox (version 20.x or greater)

macOS

- Safari (version 5.x or greater)
- Google Chrome (version 34.x or greater)

Linux

- Google Chrome (version 34.x or greater)
- Firefox (version 20.x or greater)

HP Embedded Web Server features

Learn about the HP Embedded Web Server (EWS) features available on each tab.

Figure 5-1 EWS Tabs

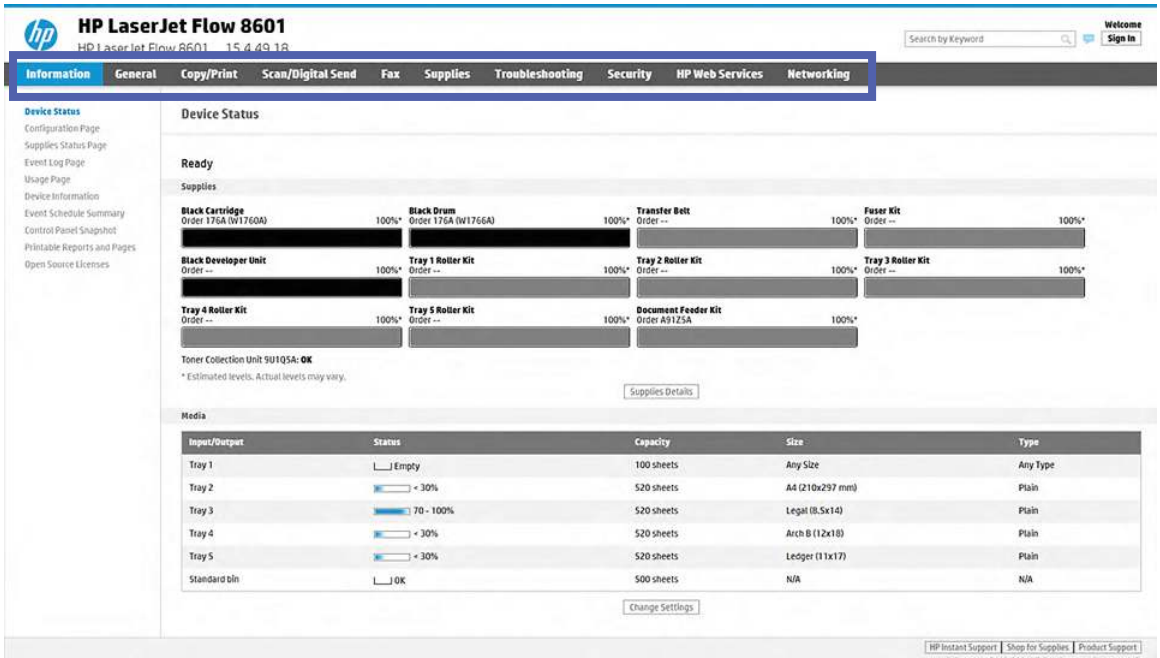

NOTE: **Copy/Print**, **Scan/Digital Send**, and **Fax** tabs only appear for multi-function printers (MFPs). A **Print** tab appears for single-function printers (SFPs).

Information tab

Settings available on the **Information** tab of the EWS.

Table 5-1 HP Embedded Web Server Information tab

Menu	Description
Configuration Page	Shows the information found on the configuration page.
Control Panel Snapshot	Shows an image of the current screen on the control panel display.
Device Information	Shows the printer network name, address, and model information. To customize these entries, click the **Device Information** menu on the **General** tab.
Device Status	Shows the printer status and shows the estimated life remaining of HP supplies. The page also shows the type and size of paper set for each tray. To change the default settings, click the **Change Settings** link.
Event Log Page	Shows a list of all printer events and errors. Use the **HP Instant Support** link (in the **Other Links** area on all HP Embedded Web Server pages) to connect to a set of dynamic web pages that help solve problems. These pages also show additional services available for the printer.
Event Schedule Summary	The Event Schedule Summary page is used to view a table of all scheduled events.
Job Log	Provides a list of the jobs that have been processed.
Open Source Licenses	Shows a summary of the licenses for open source software programs that can be used with the printer.
Print	Allows the user to send a print-ready file to the printer to be printed.
Printable Reports and Pages	Lists the internal reports and pages for the printer. Select one or more items to print.
Remote Control-Panel	Provides a way to troubleshoot or manage the printer from a browser window on a desktop or laptop.

Table 5-1 HP Embedded Web Server Information tab (continued)

Menu	Description
Supplies Status Page	Shows the status of the supplies for the printer.
Usage Page	Shows a summary of the number of pages the printer has printed, grouped by size, type, and paper print path.

General tab

Settings available on the **General** tab of the EWS.

Table 5-2 HP Embedded Web Server General tab

Menu	Description
Alerts	Set up email alerts for various printer and supplies events.
AutoSend	Configure the printer to send automated emails regarding printer configuration and supplies to specific email addresses.
Back up and Restore	Create a backup file that contains printer and user data. If necessary, use this file to restore data to the printer.
Control Panel Customization	Reorder, show, or hide features on the control-panel display. Change the default display language and keyboard layouts.
Control Panel Settings App	Shows the Settings app options that are available on the printer control panel.
Date/Time Settings	Set the date and time or synchronize with a network time server.
Device Information	Name the printer and assign an asset number to it. Enter the name of the primary contact who will receive information about the printer.
Edit Other Links	Add or customize a link to another website. This link displays in the footer area on all HP Embedded Web Server pages.
Energy Settings	Set or edit a wake time, sleep time, and sleep delay for the printer. Set a different schedule for each day of the week and for holidays. Set which interactions with the printer cause it to wake from sleep mode.
Firmware Upgrade	Download and install printer firmware upgrade files.
General Settings	Configure how the printer recovers from jams and other general printer settings.
Import/Export	Use this feature to export files that can be used to configure other devices. Select which settings, contacts, or user accounts to include in the export. The files can be imported to other devices including those with different capabilities. Any imported settings that are not available on the target device will be ignored.
Job Statistics Settings	Provides connection information about third-party job-statistics services, or enables local serverless device job accounting.
Language	Set the language in which to display the HP Embedded Web Server information.
Ordering Information	Enter information about ordering replacement toner cartridges. This information displays on the supplies status page.
Quick Sets	Configure jobs that are available in the **Quick Sets** area of the Home screen on the printer control panel.
Quota Settings	Provides connection information about third-party job-quota services, or enables local device quota service.
License Management	Use this menu to configure the engine speed with the LPD license.

Table 5-2 HP Embedded Web Server General tab (continued)

Menu	Description
Reset Factory Settings	Restore printer settings to the factory defaults.
Solution Installer	Install or remove third-party software packages that extend or modify the functionality of the printer.

Other Links list

Configure which links display in the footer of the HP Embedded Web Server (EWS) by using the **Edit Other Links** menu on the **General** tab.

NOTE: The following list includes the default links in the EWS.

Table 5-3 HP Embedded Web Server Other Links list

Menu	Description
HP Instant Support	Connect to the HP website to find solutions to printer problems.
Product Support	Connect to the support site for the printer to search for help on various topics.
Shop for Supplies	Connect to the HP website for information on purchasing original HP supplies, such as cartridges and paper.

Print tab

Refer to the table for settings in the **Print** tab.

Table 5-4 HP Embedded Web Server Print tab

Menu	Description
Print from USB Drive Settings	Enable or disable the Print from USB Drive menu on the control panel.
Manage Stored Jobs	Enable or disable the ability to store jobs in the printer memory. Configure job-storage options.
Default Print Options	Configure the default options for print jobs.
PCL and PostScript Settings	Adjust the PCL and PostScript settings for all print jobs.
Print Quality	Configure the print quality settings, including color adjustment, image registration, and allowed paper types.
Manage Trays	Configure settings for paper trays.

Supplies tab

Settings available on the **Supplies** tab of the EWS.

Table 5-5 HP Embedded Web Server Supplies tab

Menu	Description
Manage Supplies	Configure how the printer reacts when supplies reach a Very Low state.

Troubleshooting tab

Settings available on the **Troubleshooting** tab of the EWS.

Table 5-6 **HP Embedded Web Server Troubleshooting tab**

Menu	Description
Diagnostic Data NOTE: This option is available only if an administrator password is set from the **Security** tab.	Export printer information to a file that can be useful for HP technical support to use for detailed problem analysis.
Firmware Upgrade	Download and install printer firmware upgrade files.
General Troubleshooting	Use the following options as appropriate: • **Reports and Tests** area: Select and print several types of reports and tests. Some reports can be viewed in the Embedded Web Server by clicking the **View** button. • **Fax Tools** area: Configure settings for fax troubleshooting. (MFP and Digital Sender products with HP analog fax accessory only) • **OXPd Troubleshooting** area: Enable or disable the **Allow a Non-Secure Connection for Web Services** option • **Auto Recovery** area: Enable or disable the **Enable Auto Recovery** option, which allows the printer to auto recover from errors that might require the power to be turned off and on (for example, a 49 error).
Online Help	Link to HP cloud-based online help to assist in troubleshooting printing issues.
Reset Factory Settings	Restore printer settings to factory defaults.
Schedule Restart	Scheduled Restart allows users to set a time and frequency for when to restart the product.

Security tab

Settings available on the **Security** tab of the EWS.

Table 5-7 **HP Embedded Web Server Security tab**

Menu	Description
Access Control	Configure access to printer functions for specific individuals or groups, and select the method individuals use to sign in to the printer.
Account Policy	Configure for local administrator and remote configuration the password lockout and password complexity settings.
Certificate Management	Install, manage, and validate security certificates for access to the printer and the network.

Table 5-7 HP Embedded Web Server Security tab (continued)

Menu	Description
General Security	Settings for general security, including the following options: • Configure an administrator password to restrict access to certain features on the printer. • Set a custom device Service Access Code. • Set the Remote Configuration Password. • Set Embedded Web Server Options. • Enable WebScan Auto Capture Jobs. • Set PJL password and enable access commands. • Enable PostScript operations. • Set file system access and firmware upgrade security. • Enable Bluetooth Low Energy settings. • Enable or disable the Host USB port on the control panel or the USB connectivity port on the formatter for printing directly from a computer. • Set enabled SMB versions for the printer. • View the status of all security settings.
Manage Remote Apps	Manage or whitelist remote apps by importing or deleting certificates that allow devices to use this product.
Protect Stored Data	Configure and manage the internal storage for the printer. Configure settings for jobs that are stored on the printer internal storage.
Security Log	Retrieve security event log data, and export security event log data to a file that can be used for detailed problem analysis.
Self Test	Verify that the security functions are running according to expected system parameters.
Web Service Security	Allow resources on this printer to be accessed by web pages from different domains. If no sites are added to the list, then all sites are trusted.

HP Web Services tab

Settings available on the **HP Web Services** tab of the EWS.

Use the **HP Web Services** tab to configure and enable HP Web Services for this printer. HP Web Services must be enabled to use the HP ePrint feature.

Table 5-8 HP Embedded Web Server HP Web Services tab

Menu	Description
Smart Cloud Print	Enable Smart Cloud Print, which allows access to web-based apps that extend the capabilities of the printer.
Web Proxy	Configure a proxy server if there are issues enabling HP Web Services or connecting the printer to the Internet.
Web Services Setup	Connect this printer to HP Connected on the web by enabling HP Web Services.

Networking tab

Settings available on the **Networking** tab of the EWS.

Use the **Networking** tab to configure and secure network settings for the printer when it is connected to an IP-based network.

NOTE: This tab does not display if the printer is connected to other types of networks.

Table 5-9 HP Embedded Web Server Networking tab > Configuration settings

Menu	Description
AirPrint	Enable, set up, or disable network printing from Apple-supported printers.
Network Settings	Configure IPX/SPX, AppleTalk, DLC/LLC, and SNMP settings, depending on the print server model.
Other Settings	Configure general printing protocols and services supported by the print server. The available options depend on the print server model, but can include firmware update, LPD queues, USB settings, support information, and refresh rate.
Select Language	Change the language displayed by the HP Embedded Web Server. This page displays if the web pages support multiple languages. Optionally, select supported languages through language-preference settings in the browser.
TCP/IP Settings	Configure TCP/IP settings for IPv4 and IPv6 networks. NOTE: The configuration options available depend on the print server model.
Web Proxy	Configure a proxy server if there are issues enabling HP Web Services or connecting the printer to the Internet.

Table 5-10 HP Embedded Web Server Networking tab > Diagnostics settings

Menu	Description
Configuration Page	View the HP Jetdirect configuration page, which contains status and configuration information.
Network Statistics	Display network statistics that are collected and stored on the HP Jetdirect print server.
Protocol Info	View a list of network-configuration settings on the HP Jetdirect print server for each protocol.

Table 5-11 HP Embedded Web Server Networking tab > Security settings

Menu	Description
802.1X Authentication	Configure 802.1X authentication settings on the Jetdirect print server as required for client authentication on the network, and reset the 802.1X authentication settings to factory-default values. CAUTION: When changing the 802.1X authentication settings; the printer might lose its connection. To reconnect, it might be necessary to reset the print server to a factory-default state and reinstall the printer.
Announcement Agent	Enable or disable the HP Device Announcement Agent, set the configuration server, and configure mutual authentication using certificates.
IPsec/Firewall	Enable, configure, and view an IPsec/Firewall policy.

Table 5-11 HP Embedded Web Server Networking tab > Security settings (continued)

Menu	Description
Mgmt. Protocols	Configure and manage security protocols for this printer, including the following: • Set the security management level for the HP Embedded Web Server, and control traffic over HTTP and HTTPS. • Configure the SNMP (Simple Network Management Protocol) operation. Enable or disable the SNMP v1/v2c or SNMP v3 agents on the print server. • Control access through protocols that may not be secure, such as printing protocols, print services, discovery protocols, name resolution services, and configuration-management protocols.
Secure Communication	Configure Transport Layer Security (TLS) protocol, select encryption, enable FIPS-140, and enable logging of connectivity for troubleshooting.
Settings	View and restore current security settings to factory-default values. Configure security settings using the Security Configuration Wizard. NOTE: Do not use the Security Configuration Wizard to configure security settings if using network-management applications, such as HP Web Jetadmin.

Configure IP network settings

Use the EWS to configure the printer network settings.

Printer sharing disclaimer

Review the following disclaimer.

HP does not support peer-to-peer networking, as the feature is a function of Microsoft operating systems and not of the HP printer drivers. Go to Microsoft at www.microsoft.com.

View or change network settings

Use the HP Embedded Web Server to view or change IP configuration settings.

1. Open the HP Embedded Web Server (EWS):
   a. From the Home screen on the printer control panel, touch the Information icon , and then touch the Ethernet icon to display the IP address or host name.
   b. Open a web browser, and in the address line, type the IP address or host name exactly as it displays on the printer control panel. Press the `Enter` key on the computer keyboard. The EWS opens.

      https://10.10.XX.XXX

      NOTE: If the web browser displays a message indicating that accessing the website might not be safe, select the option to continue to the website. Accessing this website will not harm the computer.
2. Click the **Networking** tab to obtain network information. Change settings as needed.

Rename the printer on a network

To rename the printer on a network so that it can be uniquely identified, use the HP Embedded Web Server.

1. Open the HP Embedded Web Server (EWS):

   a. From the Home screen on the printer control panel, touch the Information icon , and then touch the Ethernet icon to display the IP address or host name.

   b. Open a web browser, and in the address line, type the IP address or host name exactly as it displays on the printer control panel. Press the `Enter` key on the computer keyboard. The EWS opens.

   https://10.10.XX.XXX

   NOTE: If the web browser displays a message indicating that accessing the website might not be safe, select the option to continue to the website. Accessing this website will not harm the computer.

2. Open the **General** tab.

3. On the Device Information page, the default printer name is in the **Nickname** field. You can change this name to uniquely identify this printer.

   NOTE: Completing the other fields on this page is optional.

4. Click the **Apply** button to save the changes.

Manually configure IPv4 TCP/IP parameters from the control panel

Use the control-panel Settings menus to manually set an IPv4 address, subnet mask, and default gateway.

1. From the Home screen on the printer control panel, navigate to the Settings application, and then select the Settings icon.

2. Open the following menus:

   a. Networking

   b. Ethernet

   c. TCP/IP

   d. IPV 4 Settings

   e. Config Method

3. Select the Manual option, and then touch the Save button.

4. Open the Manual Settings menu.

5. Touch the IP Address, Subnet Mask, or Default Gateway option.

6. Touch the first field to open a keypad. Enter the correct digits for the field, and then touch the OK button.

   Repeat the process for each field, and then touch the Save button.

Manually configure IPv6 TCP/IP parameters from the control panel

Use the control-panel Settings menus to manually set an IPv6 address.

1. From the Home screen on the printer control panel, navigate to the Settings application, and then select the Settings icon.
2. To enable manual configuration, open the following menus:
   a. Networking
   b. Ethernet
   c. TCP/IP
   d. IPV6 Settings
3. Select Enable, and then select On.
4. Select the Enable Manual Settings option, and then touch the Done button.
5. To configure the address, open the Address menu, and then touch the field to open a keypad.
6. Use the keypad to enter the address, and then touch the OK button.
7. Touch Save.

Link speed and duplex settings

Use the following steps to make changes to link speed and duplex settings.

NOTE: This information applies only to Ethernet networks. It does not apply to wireless networks.

The link speed and communication mode of the print server must match the network hub. For most situations, leave the printer in automatic mode. Incorrect changes to the link speed and duplex settings might prevent the printer from communicating with other network devices. To make changes, use the printer control panel.

NOTE: The printer setting must match the setting for the network device (a network hub, switch, gateway, router, or computer).

NOTE: Making changes to these settings causes the printer to turn off and then on. Make changes only when the printer is idle.

1. From the Home screen on the printer control panel, navigate to the Settings application, and then select the Settings icon.
2. Open the following menus:
   a. Networking
   b. Ethernet
   c. Link Speed

3. Select one of the following options:
   - Auto: The print server automatically configures itself for the highest link speed and communication mode allowed on the network.
   - 10T Half: 10 megabytes per second (Mbps), half-duplex operation
   - 10T Full: 10 Mbps, full-duplex operation
   - 10T Auto: 10 Mbps, automatic-duplex operation
   - 100TX Half: 100 Mbps, half-duplex operation
   - 100TX Full: 100 Mbps, full-duplex operation
   - 100TX Auto: 100 Mbps, automatic-duplex operation
   - 1000T Full: 1000 Mbps, full-duplex operation
4. Touch the Save button. The printer turns off and then on.

Printer security features

Restrict who has access to configuration settings, secure data, and prevent access to valuable hardware components.

Introduction

The printer includes several security features to restrict who has access to configuration settings, to secure data, and to prevent access to valuable hardware components.

Security statements

Review this important security statement.

The printer supports security standards and recommended protocols that help you keep the printer secure, protect critical information on your network, and simplify the way you monitor and maintain the printer.

Assign an administrator password

Assign an administrator password for access to the printer and the HP Embedded Web Server so that unauthorized users cannot change the printer settings.

Use the HP Embedded Web Server (EWS) to set the password

Use the following steps to set a password for the printer.

1. Open the HP Embedded Web Server (EWS):
   a. From the Home screen on the printer control panel, touch the Information icon , and then touch the Ethernet icon to display the IP address or host name.

b. Open a web browser, and in the address line, type the IP address or host name exactly as it displays on the printer control panel. Press the `Enter` key on the computer keyboard. The EWS opens.

https://10.10.XX.XXX

NOTE: If the web browser displays a message indicating that accessing the website might not be safe, select the option to continue to the website. Accessing this website will not harm the computer.

2. Click the **Security** tab.
3. Open the **General Security** menu.
4. In the area labeled **Set the Local Administrator Password**, enter the name to associate with the password in the **Username** field.
5. Enter the password in the **New Password** field, and then enter it again in the **Verify Password** field.

NOTE: To change an existing password, first enter the existing password in the **Old Password** field.

6. Click the **Apply** button.

IMPORTANT: Make note of the password and store it in a safe place. The administrator password cannot be recovered. If the administrator password is lost or forgotten, contact HP Support for the assistance required to completely reset the printer.

Click here to contact HP Support about resetting the printer password.

Provide user access credentials at the printer control panel

Use the following steps to sign into the control panel.

Some features on the printer control panel can be secured so that unauthorized people cannot use them. When a feature is secured, the printer prompts you to sign in before you can use it. You can also sign in without waiting for a prompt by selecting Sign In from the printer control panel.

Typically, the credentials for signing in to the printer are the same as for signing in to the network. Consult the network administrator for this printer if you have questions about which credentials to use.

1. From the Home screen on the printer control panel, select Sign In.
2. Follow the prompts to enter the credentials.

NOTE: To maintain security for the printer, select Sign Out when you have finished using the printer.

IP Security

IP Security (IPsec) is a set of protocols that control IP-based network traffic to and from the printer. IPsec provides host-to-host authentication, data integrity, and encryption of network communications.

For printers that are connected to the network and have an HP Jetdirect print server, you can configure IPsec by using the **Networking** tab in the HP Embedded Web Server.

Encryption support: HP High Performance Secure Hard Disks

The hard disk provides hardware-based encryption so you can securely store sensitive data without impacting printer performance. This hard disk uses the latest Advanced Encryption Standard (AES) and has versatile time-saving features and robust functionality.

Use the **Security** menu in the HP Embedded Web Server to configure the disk.

Lock the formatter

The formatter has a slot that you can use to attach a security cable.

Locking the formatter prevents someone from removing valuable components from it.

Energy-conservation settings

Learn about the energy-conservation settings that are available for the printer.

Print with EconoMode

This printer has an EconoMode option for printing drafts of documents. Using EconoMode can use less toner. However, using EconoMode can also reduce print quality.

HP does not recommend the full-time use of EconoMode. If EconoMode is used full-time, the toner supply might outlast the mechanical parts in the toner cartridge. If print quality begins to degrade and is no longer acceptable, consider replacing the toner cartridge.

NOTE: If this option is not available in the print driver, set it using the printer control panel.

Configure EconoMode from the printer control panel:

1. From the printer control panel, open the Settings menu.
2. Open the following menus:
   a. Copy/Print or Print
   b. Default Print Options
   c. Quality Level
3. Select EconoMode to enable the feature.

Set the sleep timer and configure the printer to use 1 watt or less of power

The sleep settings affect how much power the printer uses, the wake/sleep time, how quickly the printer enters sleep mode, and how quickly the printer wakes up from sleep mode.

To configure the printer to use 1 watt or less of power while in sleep mode, enter times for both the Sleep after Inactivity and Auto Off after sleep settings.

NOTE: HP does not recommend using deep sleep settings if you have Security Solutions installed. In some situations, the printer does not wake from deep sleep. For additional information, contact your HP representative.

1. From the Home screen on the printer control panel, navigate to the Settings application, and then select the Settings icon.

2. Open the following menus:
   a. General
   b. Energy Settings
   c. Sleep Settings
3. Select Sleep after Inactivity to specify the number of minutes the printer is inactive before it enters sleep mode. Enter the appropriate time period.
4. Select Auto Off after sleep to put the printer into a deeper power save mode after a period of sleep. Enter the appropriate time period.

   NOTE: By default, the printer will wake from Auto Off in response to any activity other than USB or Wi-Fi. For greater energy settings, you can set it to wake only to the power button by selecting Shut down (wake on power button only).

5. Select Done to save the settings.

Set the sleep schedule

Use the Sleep Schedule feature to configure the printer to automatically wake or go into Sleep mode at specific times on specific days of the week.

1. From the Home screen on the printer control panel, select Settings icon.
2. Open the following menus:
   a. General
   b. Energy Settings
   c. Sleep Schedule
3. Select the New Event button, and then select the type of event to schedule: Wake Event or Sleep Event.
4. For a wake or sleep event, configure the time and the days of the week for the event. Select Save to save the setting.

HP Web Jetadmin

HP Web Jetadmin is an award-winning, industry-leading tool for efficiently managing a wide variety of networked HP products, including printers, multifunction printers, and digital senders. This single solution allows you to remotely install, monitor, maintain, troubleshoot, and secure your printing and imaging environment – ultimately increasing business productivity by helping you save time, control costs, and protect your investment.

HP Web Jetadmin upgrades are periodically made available to provide support for specific product features. Go to www.hp.com/go/webjetadmin for more information.

Software and firmware updates

HP regularly updates features that are available in the printer firmware. To take advantage of the most current features, update the printer firmware.

Download the most recent firmware update file from the web:

Go to http://www.hp.com/support/IjX60000dn. Click **Software, Drivers and Firmware**.

6 Solve problems

Troubleshoot problems with the printer. Locate additional resources for help and technical support.

The following information is correct at the time of publication. For current information, see http://www.hp.com/support/ljX60000dn.

For more information:

HP's all-inclusive help for the printer includes the following information:

- Install and configure
- Learn and use
- Solve problems
- Download software and firmware updates
- Join support forums
- Find warranty and regulatory information

Control panel help system

The printer has a built-in Help system that explains how to use each screen.

To open the Help system, touch the Help button ? in the upper-right corner of the screen.

For some screens, the Help opens to a global menu where you can search for specific topics. You can browse through the menu structure by touching the buttons in the menu.

Some Help screens include animations that show specific procedures, such as clearing paper jams.

If the printer alerts of an error or warning, touch the Help button ? to open a message that describes the problem. The message also contains instructions to help solve the problem.

Reset factory settings

Resetting the printer settings to the factory-set defaults can help resolve problems.

Introduction

Use one of the following methods to reset the printer settings to the original settings from the factory.

Method one: Reset factory settings from the printer control panel

Use the printer control panel to restore the settings to their original values.

1. From the Home screen on the printer control panel, navigate to the Settings application, and then select the Settings icon.
2. Open the following menus:
   a. General
   b. Reset Factory Settings
3. Select Reset.

   A verification message advises that completing the reset function might result in loss of data.
4. Select Reset to complete the process.

NOTE: The printer restarts automatically after the reset operation completes.

Method two: Reset factory settings from the HP Embedded Web Server (network-connected printers only)

Use the HP EWS to reset the printer settings to the original settings.

1. On the printer control panel, select the Information button, and then select the Network icon to display the IP address or host name.
2. Open the **General** tab.
3. On the left side of the screen, click **Reset Factory Settings**.
4. Click the **Reset** button.

NOTE: The printer restarts automatically after the reset operation completes.

A “Cartridge is low” or “Cartridge is very low” message displays on the printer control panel or EWS

Review the possible solutions to this issue.

Cartridge is low: The printer indicates when a toner cartridge level is low. Actual toner cartridge life remaining may vary. Consider having a replacement available to install when print quality is no longer acceptable. The toner cartridge does not need to be replaced now.

Continue printing with the current cartridge until redistributing the toner no longer yields acceptable print quality. To redistribute the toner, remove the toner cartridge from the printer and gently rock the cartridge back and forth end to end. Reinsert the toner cartridge into the printer and close the cover.

Cartridge is very low: The printer indicates when the toner cartridge level is very low. Actual toner cartridge life remaining may vary. To extend the life of the toner, gently rock the cartridges back and

forth end to end. Consider having a replacement available to install when print quality is no longer acceptable. The toner cartridge does not need to be replaced now unless the print quality is no longer acceptable.

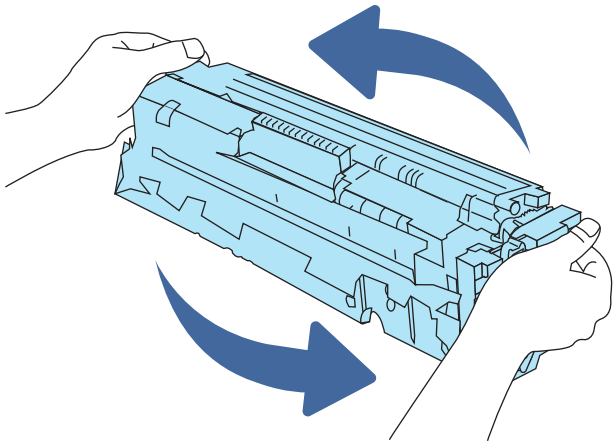

HP's Premium Protection Warranty expires when a message indicating that HP's Premium Protection Warranty on this supply has ended appears on the Supplies Status Page or the EWS.

Change the "Very Low" settings

You can change the way the printer reacts when supplies reach the Very Low state. You do not have to re-establish these settings when you install a new cartridge.

Change the "Very Low" settings at the control panel

Change the setting at the printer control panel.

1. From the Home screen on the printer control panel, navigate to the Settings application, and then select the Settings icon.
2. Open the following menus:
   a. Manage Supplies
   b. Very Low Behavior
   c. Black Cartridge or Color Cartridges
3. Select one of the following options:
   - Select the Stop option to set the printer to stop printing when the cartridge reaches the **Very Low** threshold.
   - Select the Prompt to continue option to set the printer to stop printing when the cartridge reaches the **Very Low** threshold. You can acknowledge the prompt or replace the cartridge to resume printing.
   - Select the Continue option to set the printer to alert you that the cartridge is very low, and to continue printing beyond the **Very Low** setting without interaction. This can result in unsatisfactory print quality.

For printers with fax capability

When the printer is set to the Stop or Prompt to continue option, there is some risk that faxes will not print when the printer resumes printing. This can occur if the printer has received more faxes than the memory can hold while the printer is waiting.

The printer can print faxes without interruption when it passes the Very Low threshold if you select the Continue option for the cartridge, but print quality might degrade.

Order supplies

Order supplies and paper for your HP printer.

Table 6-1 **Ordering options**

Ordering option	Ordering information
Order supplies and paper	www.hp.com
Order through service or support providers	Contact an HP-authorized service or support provider.
Order using the HP Embedded Web Server (EWS)	To access, in a supported web browser on your computer, enter the printer IP address or host name in the address/URL field. The EWS contains a link to the HP website, which provides options for purchasing Original HP supplies.

Printer does not pick up paper or misfeeds

Use this information if the printer is not picking up paper from the tray or is picking up multiple sheets of paper at one time.

Introduction

The following solutions can help solve problems if the printer is not picking up paper from the tray or is picking up multiple sheets of paper at one time. Either of these situations can result in paper jams.

The printer does not pick up paper

If the printer does not pick up paper from the tray, try these solutions:

1. Open the printer and remove any jammed sheets of paper. Verify that no torn remnants of paper remain inside the printer.
2. Load the tray with the correct size of paper for the job.
3. Make sure the paper size and type are set correctly on the printer control panel.
4. Make sure the paper guides in the tray are adjusted correctly for the size of paper. Adjust the guides to the appropriate indentation in the tray. The arrow on the tray guide should line up exactly with the marking on the tray.

NOTE: Do not adjust the paper guides tightly against the paper stack. Adjust them to the indentations or markings in the tray.

The following images show examples of the paper-size indentations in the trays for various printers. Most HP printers have markings similar to these.

Figure 6-1 Size markings for Tray 1 or the multipurpose tray

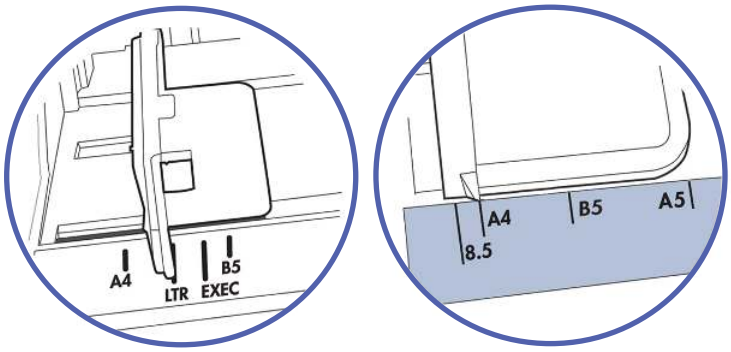

Figure 6-2 Size markings for cassette trays

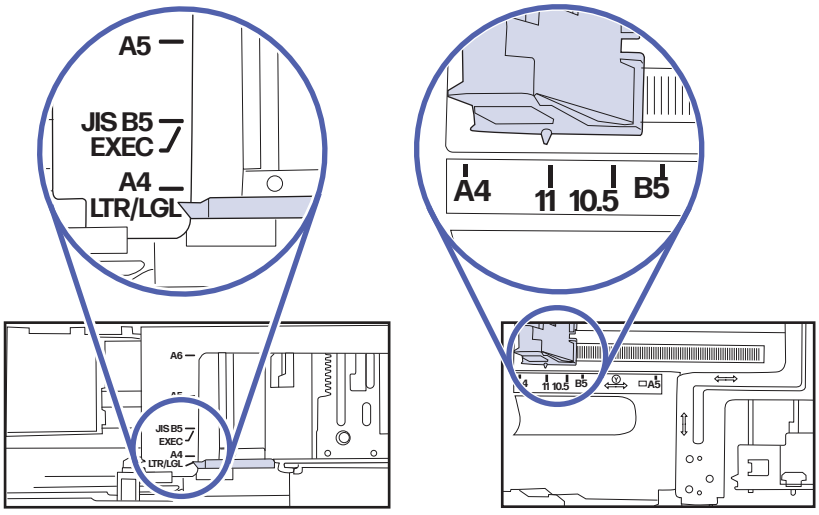

5. Verify that the humidity in the room is within specifications for this printer and that paper is being stored in unopened packages. Most reams of paper are sold in moisture-proof wrapping to keep paper dry.

   In high-humidity environments, paper at the top of the stack in the tray can absorb moisture, and it might have a wavy or uneven appearance. If this happens, remove the top 5 to 10 sheets of paper from the stack.

   In low-humidity environments, excess static electricity can cause sheets of paper to stick together. If this happens, remove the paper from the tray, and flex the stack by holding it at each end and bringing the ends up to form a U shape. Then, rotate the ends down to reverse the U shape. Next, hold each side of the stack of paper and repeat this process. This process releases individual sheets without introducing static electricity. Straighten the paper stack against a table before returning it to the tray.

Figure 6-3 Technique for flexing the paper stack

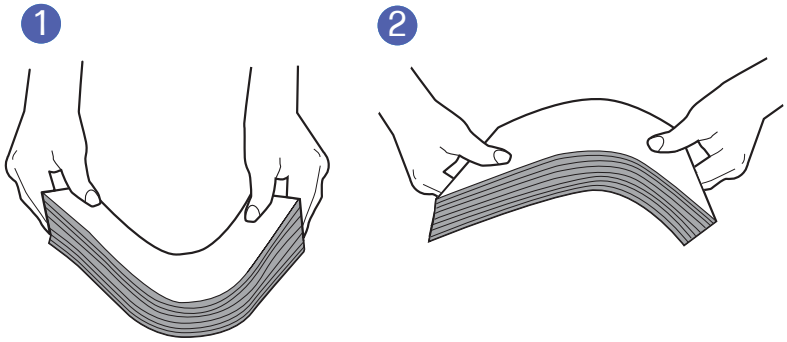

6. Check the printer control panel to see if it is displaying a prompt to feed the paper manually. Load paper, and continue.

7. The rollers above the tray might be contaminated. Clean the rollers with a lint-free cloth dampened with warm water. Use distilled water, if it is available.

CAUTION: Do not spray water directly onto the printer. Instead, spray water on the cloth or dab the cloth in water and wring it out before cleaning the rollers.

The following image shows examples of the roller location for various printers.

Figure 6-4 Roller locations for Tray 1 or the multipurpose tray

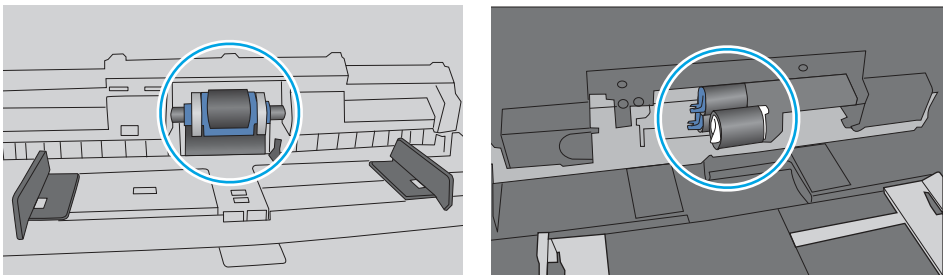

The printer picks up multiple sheets of paper

If the printer picks up multiple sheets of paper from the tray, try these solutions:

1. Remove the stack of paper from the tray and flex it, rotate it 180 degrees, and flip it over. *Do not fan the paper.* Return the stack of paper to the tray.

NOTE: Fanning the paper introduces static electricity. Instead of fanning the paper, flex the stack by holding it at each end and bringing the ends up to form a U shape. Then, rotate the ends down to reverse the U shape. Next, hold each side of the stack of paper and repeat this process. This process releases individual sheets without introducing static electricity. Straighten the paper stack against a table before returning it to the tray.

Figure 6-5 Technique for flexing the paper stack

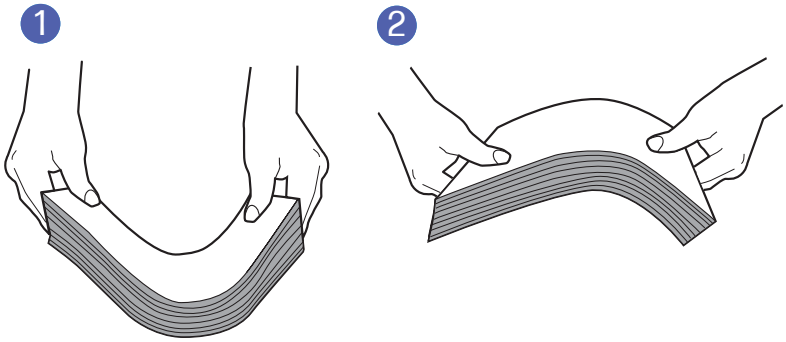

2. Use only paper that meets HP specifications for this printer.

3. Verify that the humidity in the room is within specifications for this printer, and that paper is being stored in unopened packages. Most reams of paper are sold in moisture-proof wrapping to keep paper dry.

   In high-humidity environments, paper at the top of the stack in the tray can absorb moisture, and it might have a wavy or uneven appearance. If this happens, remove the top 5 to 10 sheets of paper from the stack.

   In low-humidity environments, excess static electricity can cause sheets of paper to stick together. If this happens, remove the paper from the tray and flex the stack as described above.

4. Use paper that is not wrinkled, folded, or damaged. If necessary, use paper from a different package.

5. Make sure the tray is not overfilled by checking the stack-height markings inside the tray. If it is overfilled, remove the entire stack of paper from the tray, straighten the stack, and then return some of the paper to the tray.

   The following examples show the stack-height markings in the trays for various printers. Most HP printers have markings similar to these. Also make sure that all sheets of paper are below the tabs near the stack-height marks. These tabs help hold the paper in the correct position as it enters the printer.

Figure 6-6 Stack-height markings

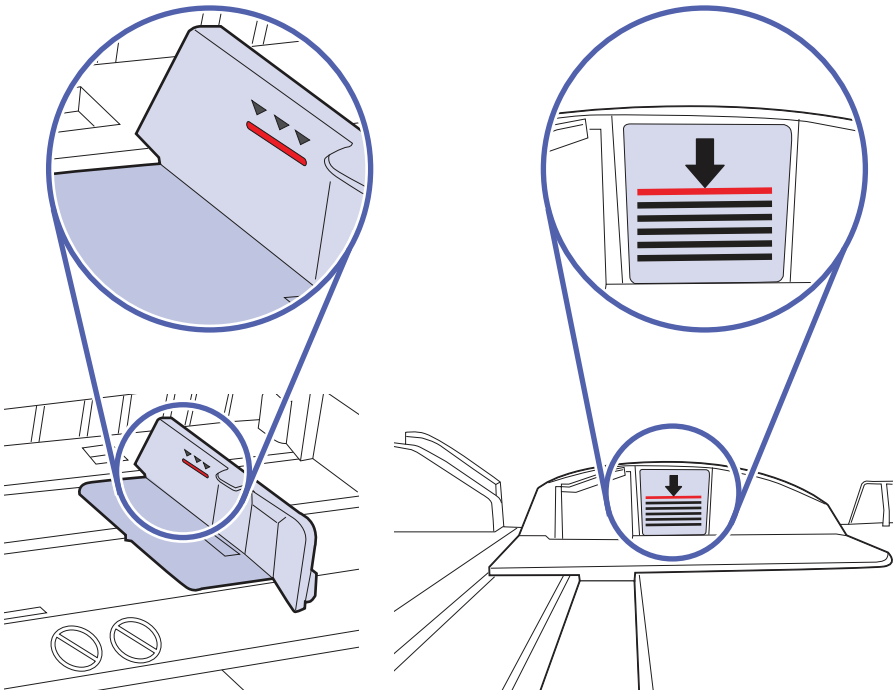

Figure 6-7 Tab for the paper stack

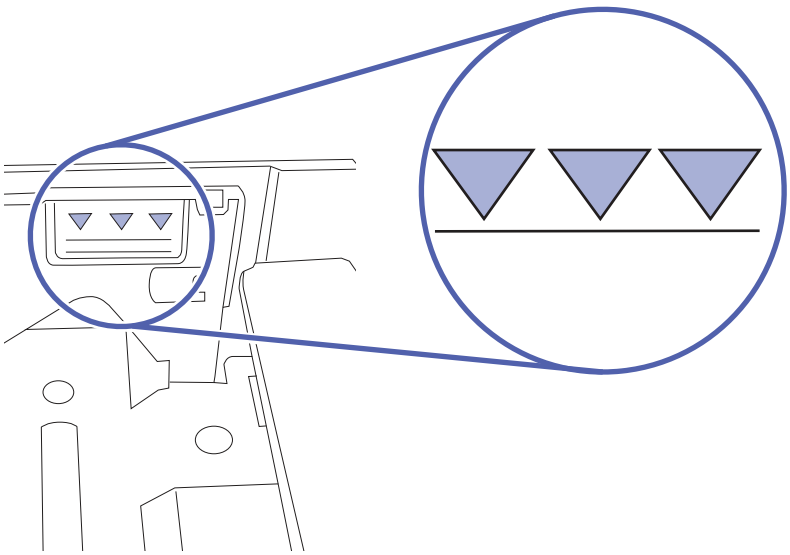

6. Make sure the paper guides in the tray are adjusted correctly for the size of paper. Adjust the guides to the appropriate indentation in the tray. The arrow on the tray guide should line up exactly with the marking on the tray.

NOTE: Do not adjust the paper guides tightly against the paper stack. Adjust them to the indentations or markings in the tray.

The following images show examples of the paper-size indentations in the trays for various printers. Most HP printers have markings similar to these.

Figure 6-8 Size markings for Tray 1 or the multipurpose tray

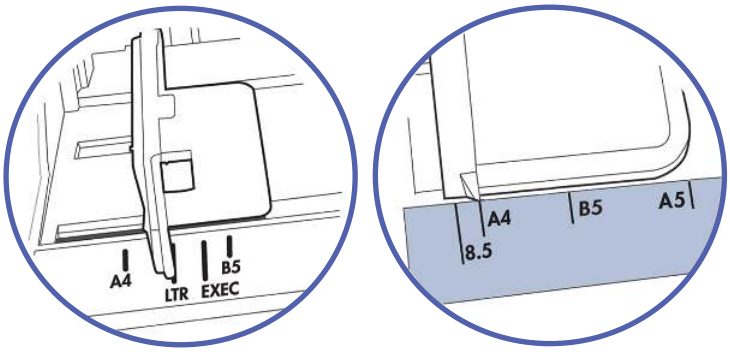

Figure 6-9 Size markings for cassette trays

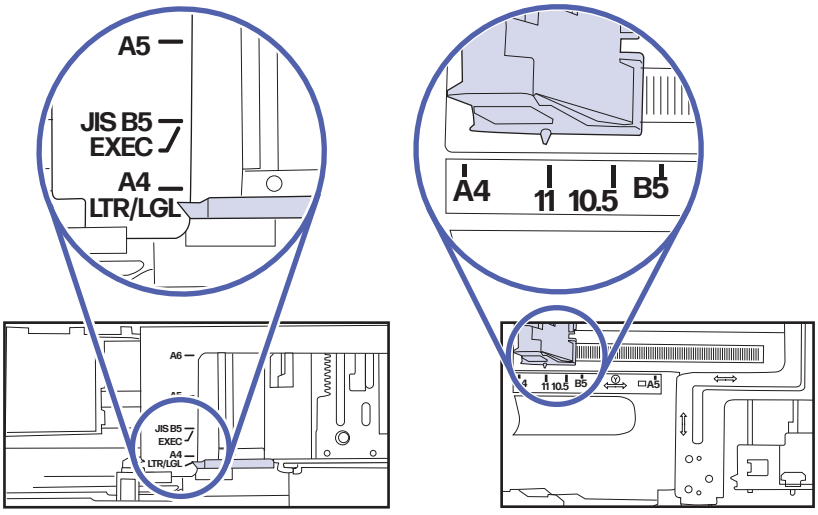

7. Make sure the printing environment is within recommended specifications.

Clear paper jams

Use the procedures in this section to clear jammed paper from the printer paper path.

NOTE: Images used might not reflect your exact model and configuration.

Introduction

The following information includes instructions for clearing paper jams from the printer.

Paper jam locations

Learn about the paper jam locations.

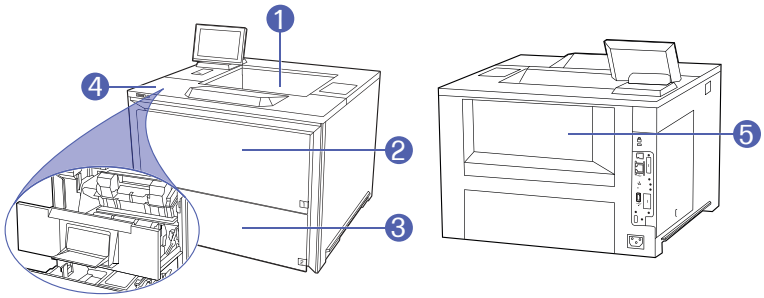

Item	Description
1	Output bin
2	Tray 1
3	Tray 2
4	Cartridge access area
5	Fuser

Auto-navigation for clearing paper jams

Learn about printer jam clearing auto-navigation.

The auto-navigation feature assists in clearing jams by providing step-by-step instructions on the control panel.

When you complete a step, the printer displays instructions for the next step until you have completed all steps in the procedure.

Experiencing frequent or recurring paper jams?

To reduce the number of paper jams, try these solutions.

View a video that demonstrates how to load paper in a way that reduces the number of paper jams

1. Use only paper that meets HP specifications for this printer.
2. Use paper that is not wrinkled, folded, or damaged. If necessary, use paper from a different package.
3. Use paper that has not previously been printed or copied on.
4. Make sure the tray is not overfilled. If it is, remove the entire stack of paper from the tray, straighten the stack, and then return some of the paper to the tray.
5. Make sure the paper guides in the tray are adjusted correctly for the size of paper. Adjust the guides so they are touching the paper stack without bending it.
6. Make sure that the tray is fully inserted in the printer.
7. If you are printing on heavy, embossed, or perforated paper, use the manual feed feature and feed sheets one at a time.
8. Open the Trays menu on the printer control panel. Verify that the tray is configured correctly for the paper type and size.

9. Make sure the printing environment is within recommended specifications.

13.B2.D1 jam error in tray 1

Follow these troubleshooting steps in the order presented.

Recommended action for customers

Use the following procedure to check for paper in all possible jam locations related to Tray 1. When a jam occurs, the control panel might display a message and an animation that assists in clearing the jam.

- **13.B2.D1 Jam in right door**

1. If jammed paper is visible in Tray 1, clear the jam by gently pulling the paper straight out.

2. If you cannot remove the paper, or if no jammed paper is visible in Tray 1, close Tray 1 and open the toner access door by pressing toner cartridge door release button (callout 1) and opening the door forward (callout 2).

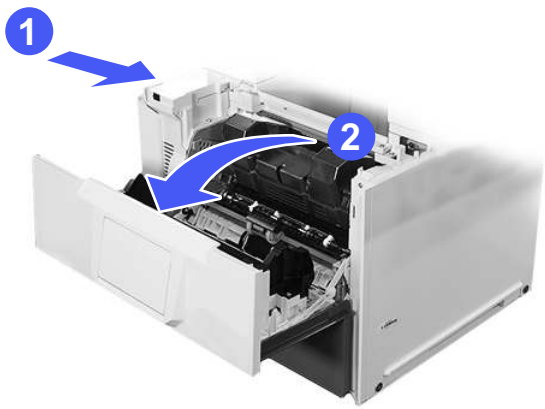

3. Remove the toner cartridge from the printer by pulling it straight out.

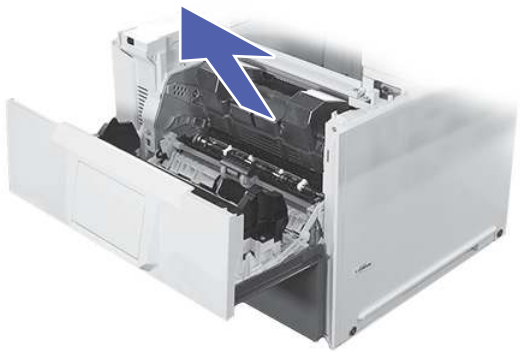

4. Remove any and all paper found inside the printer.

⚠ CAUTION: Do not touch the transfer roller. Contaminants can affect print quality.

a. Lift the green lever to open up the paper feed area.

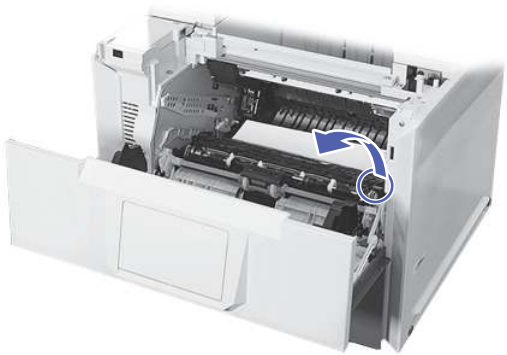

b. Remove the paper by slowly pulling towards the back of the printer then out from inside.

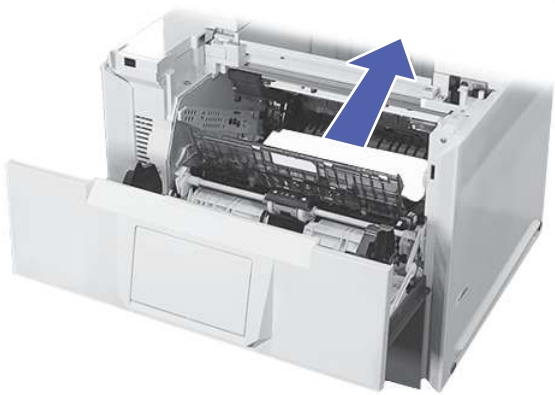

c. Lift up the green registration access lever.

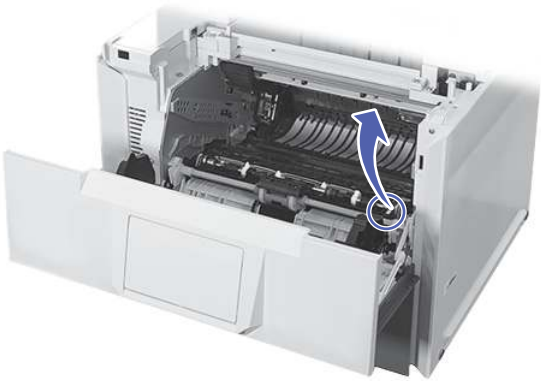

d. Remove the paper by slowly pulling out from inside the printer.

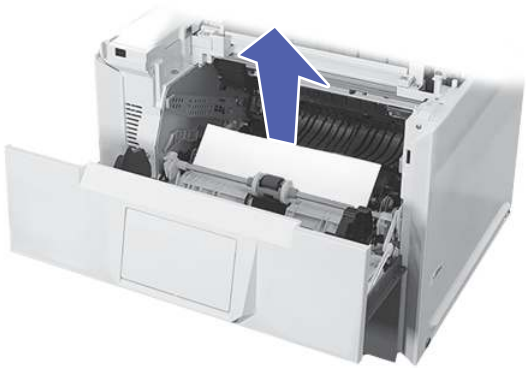

5. Install the toner cartridge and close the access door.
6. If the error persists, ensure the type and quality of the paper being used meets the HP specifications for the printer.
7. Ensure that the paper guides are set to the correct paper size and the paper is loaded into tray 1 correctly without overfilling the tray.

Circle callout: The inside of left guide shows paper max fill line.

8. Clean the pickup roller with a dampened lint-free cloth as needed.

   a. Open the toner cartridge door.

   b. Clean the pickup roller with a dampened lint-free cloth as needed.

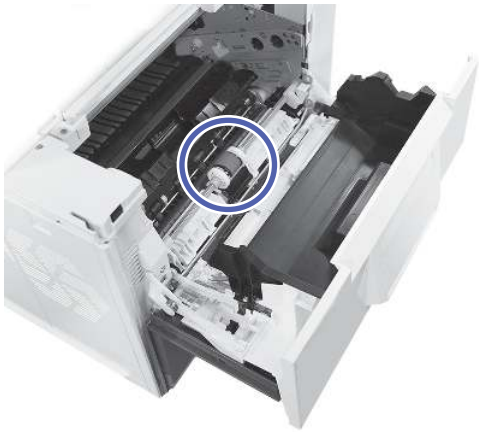

9. If the error persists, contact your HP-authorized service or support provider, or contact customer support at www.hp.com/go/contactHP.

13.B2.D2 jam error in tray 2

Follow these troubleshooting steps in the order presented.

Recommended action for customers

Use the following procedure to check for paper in all possible jam locations related to Tray 2. When a jam occurs, the control panel might display a message and an animation that assists in clearing the jam.

- **13.B2.D2 Jam in right door**. This message appears if there is an issue when pulling paper from tray 2.

1. Open tray 2.

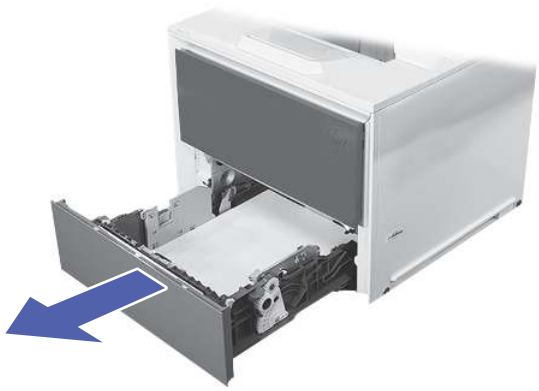

2. Remove any jammed or damaged sheets of paper. Verify that the tray is not overfilled and that the paper guides are adjusted correctly.

3. Close tray 2.

4. If you cannot remove the paper, or if no jammed paper is visible in Tray 2, open the toner access door by pressing the toner cartridge door release button (callout 1) and opening the door forward (callout 2).

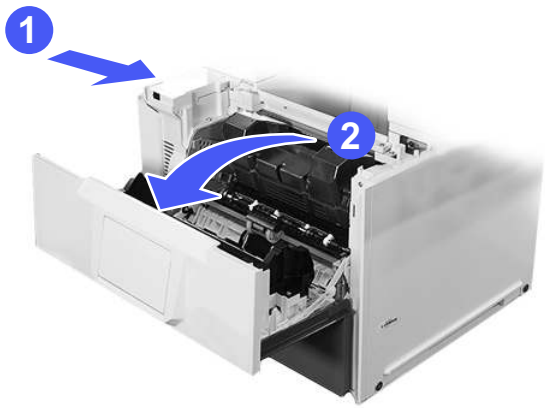

5. Remove the toner cartridge from the printer by pulling it straight out.

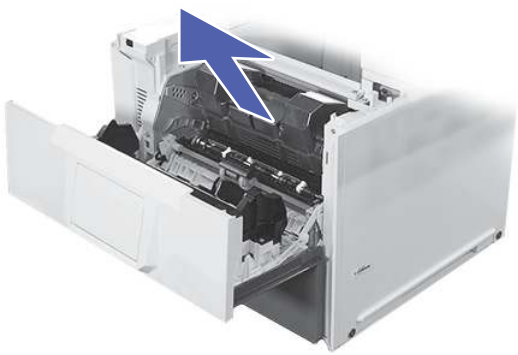

6. Remove any and all paper found inside the printer.

⚠ CAUTION: Do not touch the transfer roller. Contaminants can affect print quality.

a. Lift up the green registration access lever.

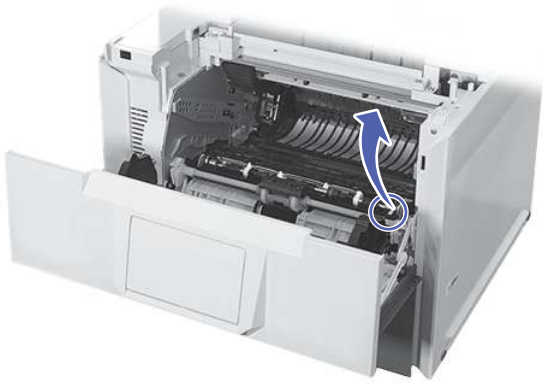

b. Remove the paper by slowly pulling out from inside the printer.

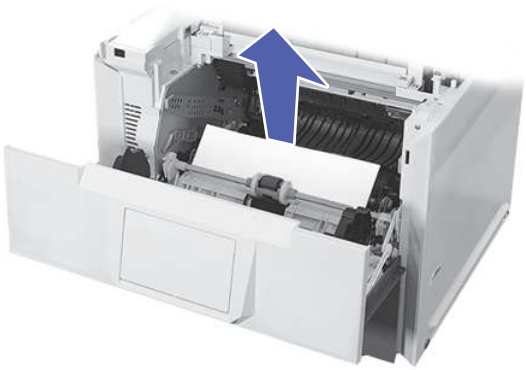

c. Lift the green lever to open up the paper feed area.

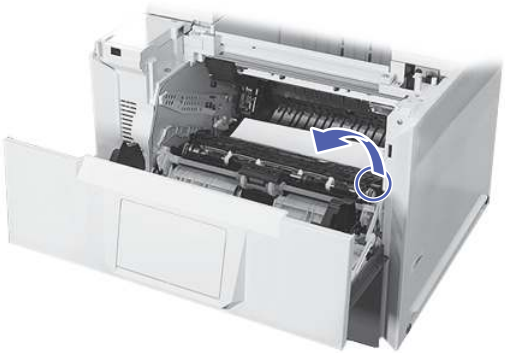

d. Remove the paper by slowly pulling towards the back of the printer then out from inside.

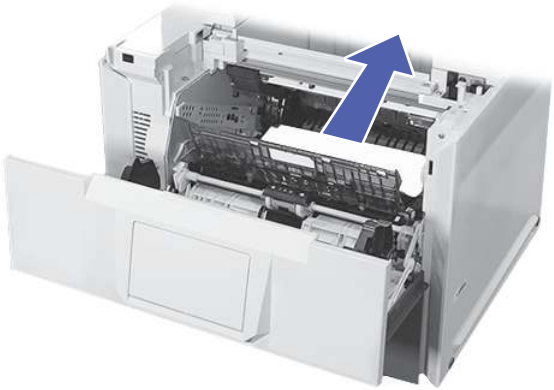

7. If the error persists, ensure the type and quality of the paper being used meets the HP specifications for the printer.

8. Ensure that the tray width and length guides are set to the correct paper size for the paper being installed into the tray.

Figure 6-10 Adjust guides

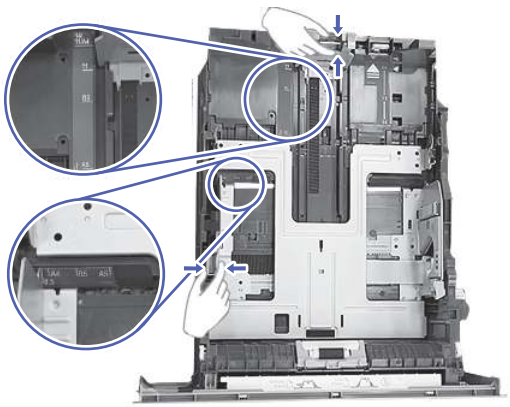

9. Ensure the paper is not filled above the fill mark (line below 3 triangles). Remove any excess media.

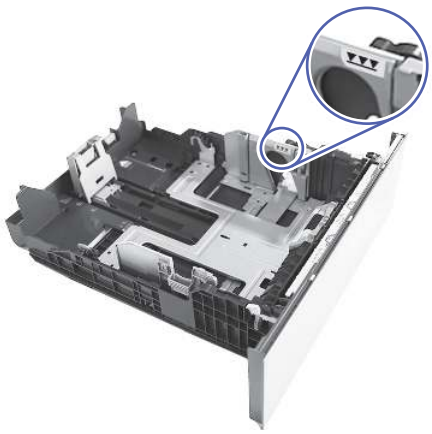

10. If the error persists, clean the tray pick, feed, and separation rollers.

a. Remove tray 2.

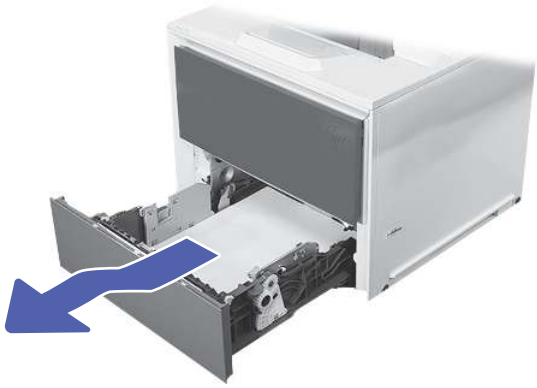

b. Remove the tray roller assembly.

Push the tab (callout 1) and drop and slide the rollers in the indicated direction to remove.

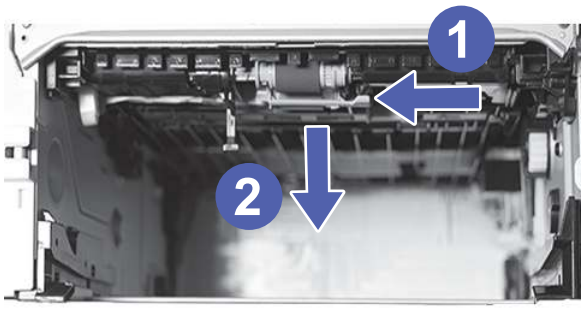

c. Clean the rollers with a dampened lint-free cloth.

d. Reinstall the roller by sliding them back onto the shaft.

e. Install tray 2.

11. If the error persists, contact your HP-authorized service or support provider, or contact customer support at www.hp.com/go/contactHP.

13.A3 jam error in tray 3

Follow these troubleshooting steps in the order presented.

Recommended action for customers

Use the following procedure to check for paper in all possible jam locations related to the 550-sheet trays. When a jam occurs, the control panel might display a message and an animation that assists in clearing the jam.

- **13.A3.A3 Jam in tray 3**
- **13.A3.D3 Jam in tray 3**

1. Open tray 3.

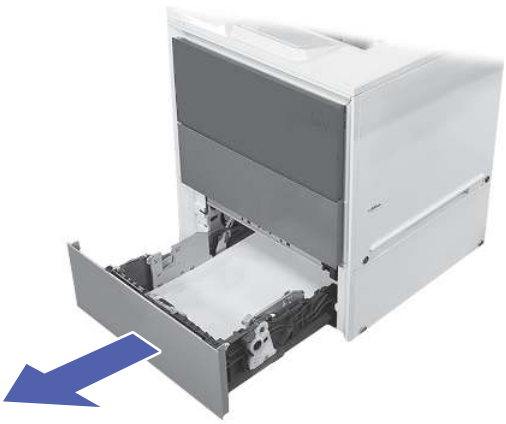

2. Remove any jammed or damaged sheets of paper. Verify that the tray is not overfilled and that the paper guides are adjusted correctly.

3. If paper is stuck going up into the printer, try to grab it with two hands and pull slowly down to remove it.

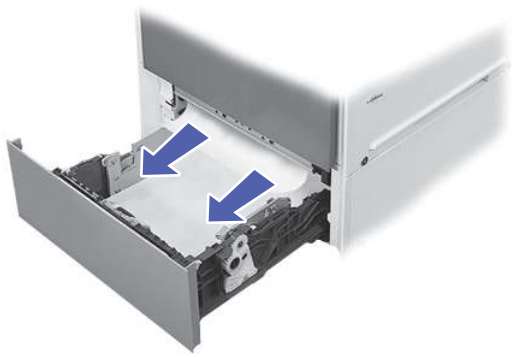

NOTE: If needed, remove the tray by pulling out and then lifting up out of the printer.

Tray 2 shown as all paper cassette trays remove from the printer the same way.

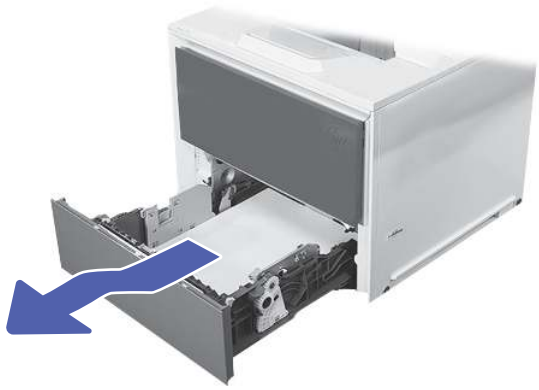

4. Install and close the tray.
5. If the error persists, ensure the type and quality of the paper being used meets the HP specifications for the printer.

6. Ensure that the tray width and length guides are set to the correct paper size for the paper being installed into the tray.

Figure 6-11 Adjust guides

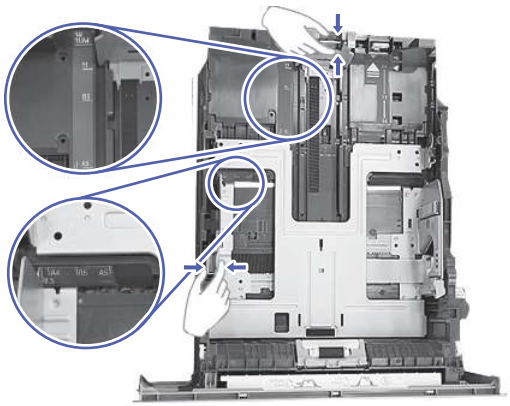

7. Ensure the paper is not filled above the fill mark (line below 3 triangles). Remove any excess media.

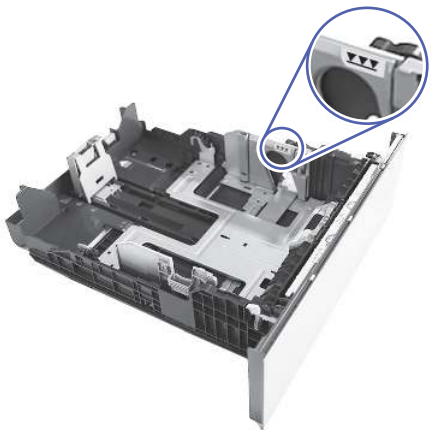

8. If the error persists, clean the tray pick, feed, and separation rollers

   a. Remove the paper tray cassette.

   IMPORTANT: Tray 2 shown as all paper cassette trays remove from the printer the same way.

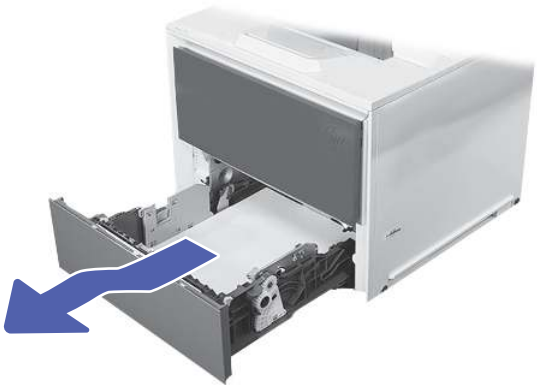

b. Remove the tray roller assembly.

Push the tab (callout 1) and drop and slide the rollers in the indicated direction to remove.

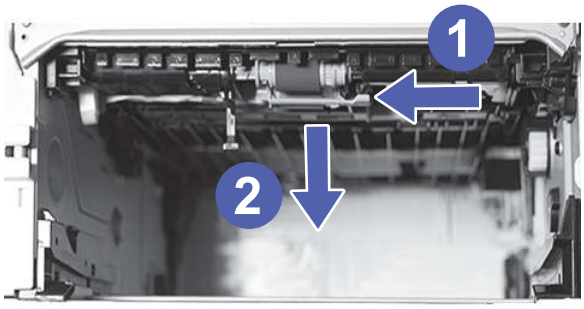

c. Clean the rollers with a dampened lint-free cloth.

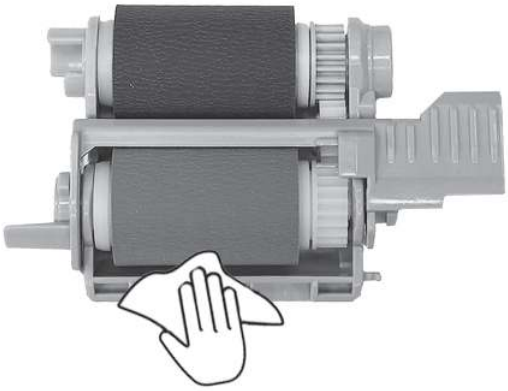

d. Reinstall the roller by sliding them back onto the shaft.

e. Install the tray.

9. If the error persists, contact your HP-authorized service or support provider, or contact customer support at www.hp.com/go/contactHP.

13.A4 jam error in tray 4

Follow these troubleshooting steps in the order presented.

Recommended action for customers

Use the following procedure to check for paper in all possible jam locations related to the 550-sheet trays. When a jam occurs, the control panel might display a message and an animation that assists in clearing the jam.

- **13.A4.A4 Jam in tray 4**
- **13.A4.D4 Jam in tray 4**

1. Open tray 4.

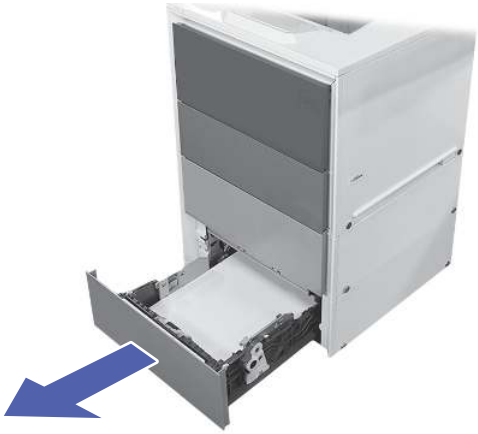

2. Remove any jammed or damaged sheets of paper. Verify that the tray is not overfilled and that the paper guides are adjusted correctly.

3. If paper is stuck going up into the printer, try to grab it with two hands and pull slowly down to remove it.

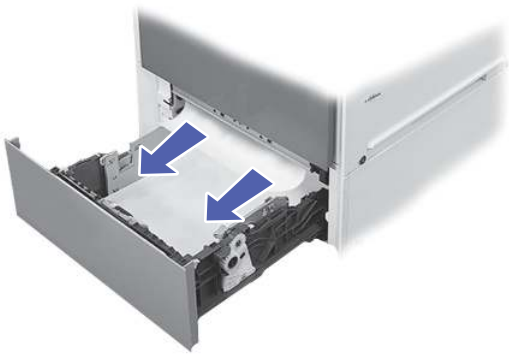

NOTE: If needed, remove the tray by pulling out and then lifting up out of the printer. Then remove the paper.

Tray 2 shown as all paper cassette trays remove from the printer the same way.

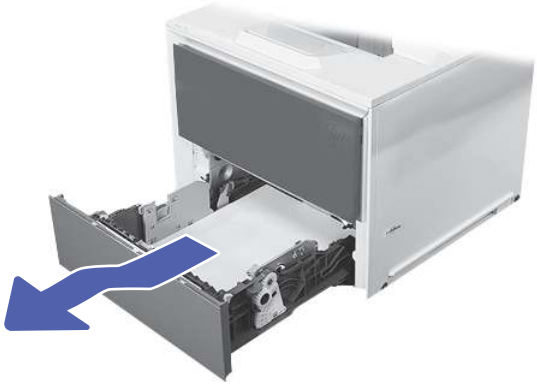

4. Install and close the tray.
5. If the error persists, ensure the type and quality of the paper being used meets the HP specifications for the printer.
6. Ensure that the tray width and length guides are set to the correct paper size for the paper being installed into the tray.

Figure 6-12 **Adjust guides**

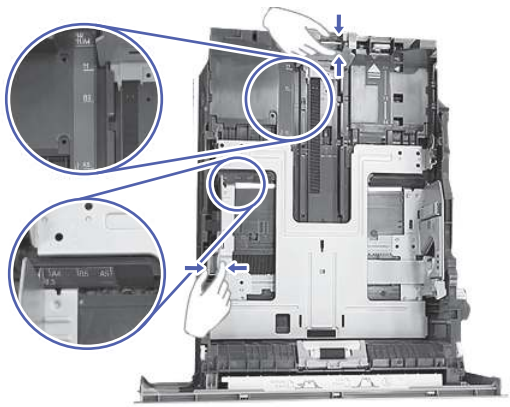

7. Ensure the paper is not filled above the fill mark (line below 3 triangles). Remove any excess media.

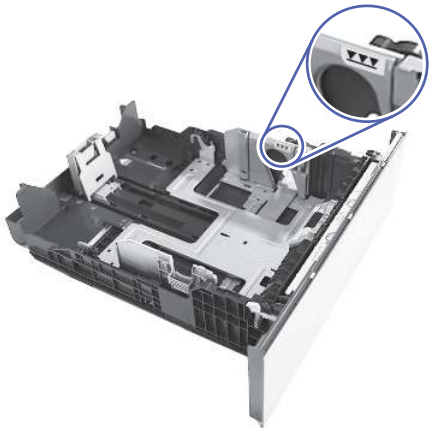

8. If the error persists, clean the tray pick, feed, and separation rollers

   a. Remove the paper tray cassette.

   IMPORTANT: Tray 2 shown as all paper cassette trays remove from the printer the same way.

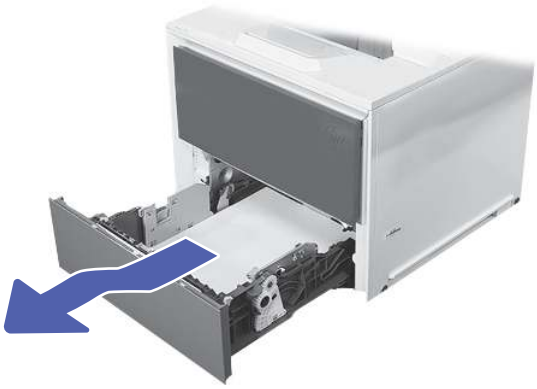

   b. Remove the tray roller assembly.

   Push the tab (callout 1) and drop and slide the rollers in the indicated direction to remove.

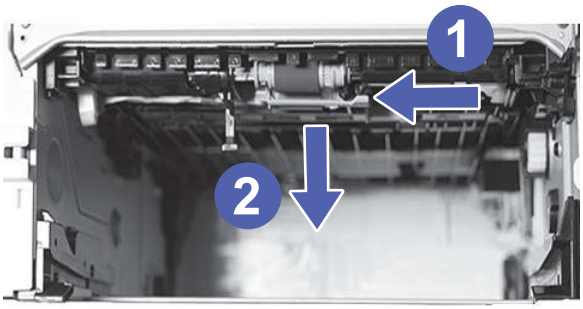

c. Clean the rollers with a dampen lint free cloth.

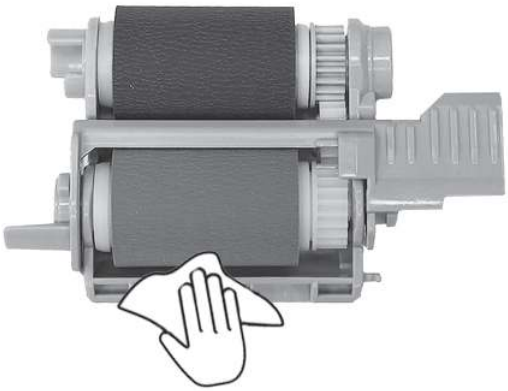

d. Reinstall the roller by sliding them back onto the shaft.

e. Install the tray.

9. If the error persists, contact your HP-authorized service or support provider, or contact customer support at www.hp.com/go/contactHP.

13.A5 jam error in tray 5

Follow these troubleshooting steps in the order presented.

Recommended action for customers

Use the following procedure to check for paper in all possible jam locations related to the 550-sheet trays. When a jam occurs, the control panel might display a message and an animation that assists in clearing the jam.

- **13.A5.A5 Jam in tray 5**
- **13.A5.D5 Jam in tray 5**

1. Open tray 5.

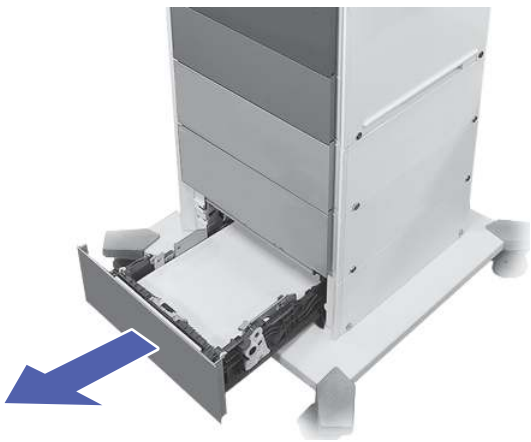

2. Remove any jammed or damaged sheets of paper. Verify that the tray is not overfilled and that the paper guides are adjusted correctly.

3. If paper is stuck going up into the printer, try to grab it with two hands and pull slowly down to remove it.

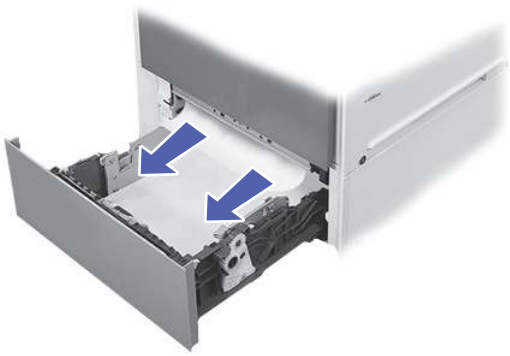

NOTE: If needed, remove the tray by pulling out and then lifting up out of the printer.

Tray 2 shown as all paper cassette trays remove from the printer the same way.

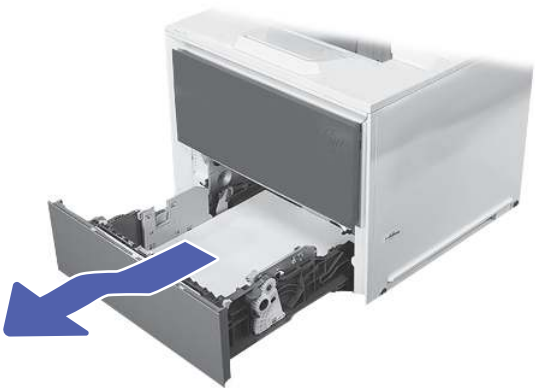

4. Install and close the tray.

5. If the error persists, ensure the type and quality of the paper being used meets the HP specifications for the printer.

6. Ensure that the tray width and length guides are set to the correct paper size for the paper being installed into the tray.

Figure 6-13 **Adjust guides**

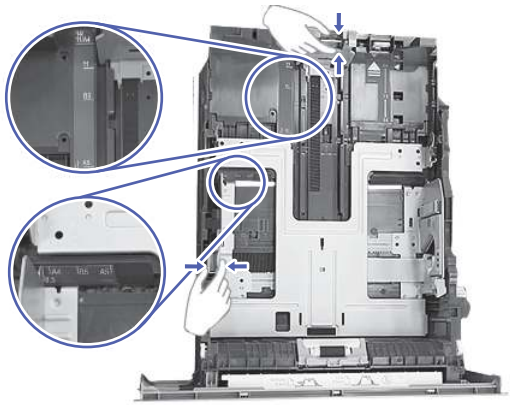

7. Ensure the paper is not filled above the fill mark (line below 3 triangles). Remove any excess media.

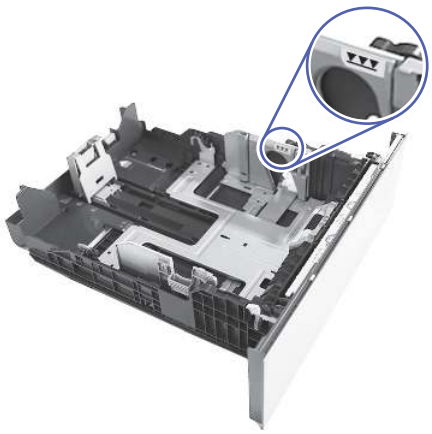

8. If the error persists, clean the tray pick, feed, and separation rollers

   a. Remove the paper tray cassette.

   IMPORTANT: Tray 2 shown as all paper cassette trays remove from the printer the same way.

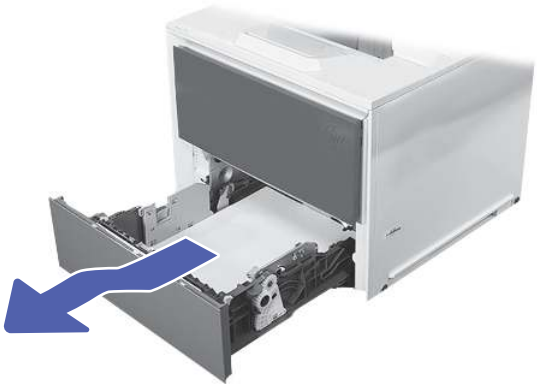

b. Remove the tray roller assembly.

Push the tab (callout 1) and drop and slide the rollers in the indicated direction to remove.

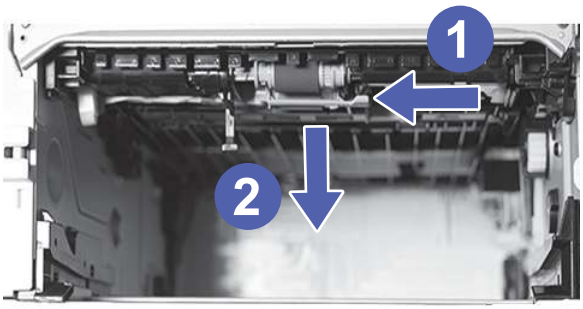

c. Clean the rollers with a dampen lint free cloth.

d. Reinstall the roller by sliding them back onto the shaft.

e. Install the tray.

9. If the error persists, contact your HP-authorized service or support provider, or contact customer support at www.hp.com/go/contactHP.

13.B2 jam error in top door

Follow these troubleshooting steps in the order presented.

Recommended action for customers

Use the following procedure to check for paper in the lower-right door. When a jam occurs, the control panel might display a message and an animation that assists in clearing the jam.

- **13.B2.yz Jam in top door.**

  y = A or D

  z = Tray that paper was printing from.

- **13.B2.FF Jam in top door**

1. Open the toner access door by pressing the toner cartridge door release button (callout 1) and opening the door forward (callout 2).

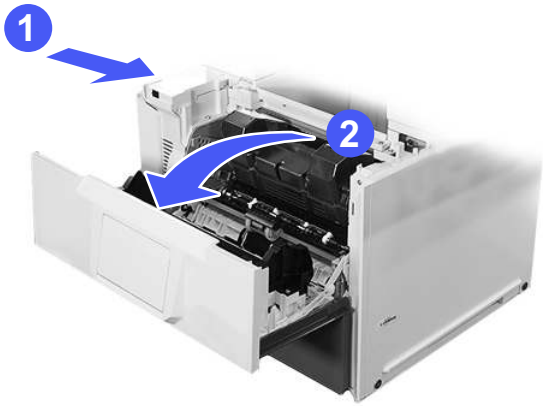

2. Remove the toner cartridge from the printer by pulling it straight out.

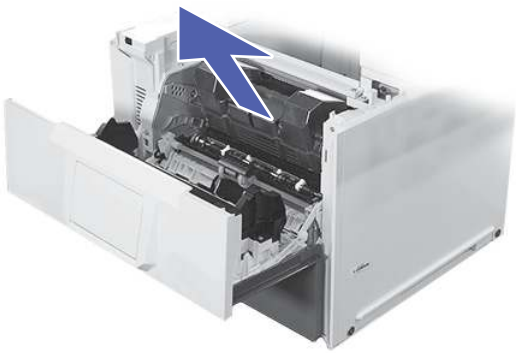

3. Remove any and all paper found inside the printer.

⚠ CAUTION: Do not touch the transfer roller. Contaminants can affect print quality.

a. Lift up the green registration access lever.

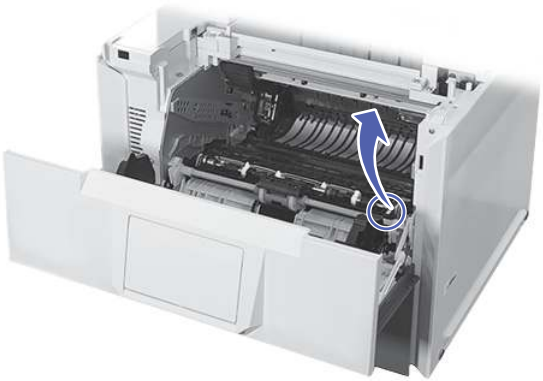

b. Remove the paper by slowly pulling out from inside the printer.

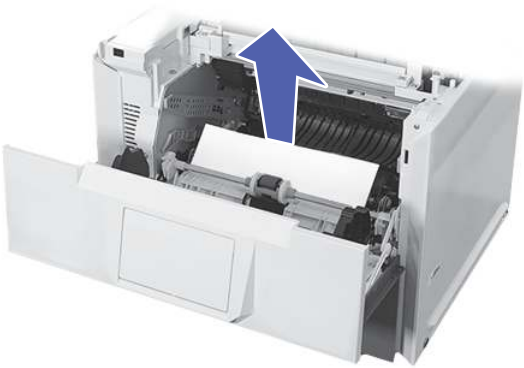

c. Lift the green lever to open up the paper feed area.

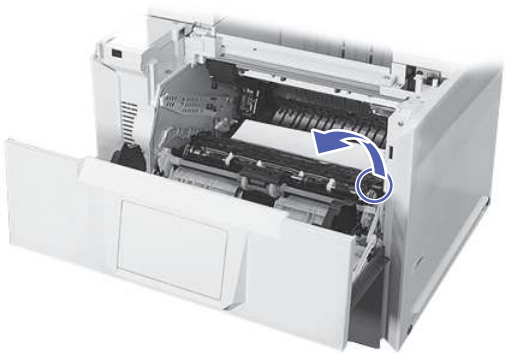

d. Remove the paper by slowly pulling towards the back of the printer then out from inside.

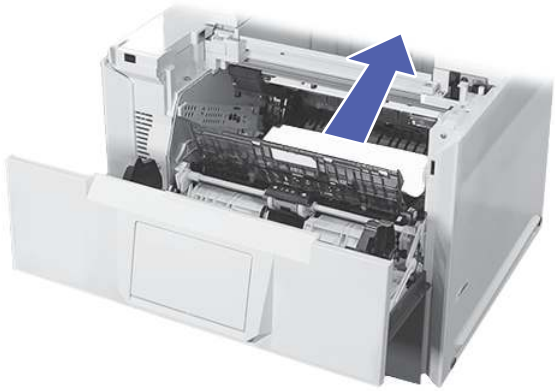

4. Install the toner cartridge and close the access door.

5. Ensure that the tray width and length guides are set to the correct paper size for the paper tray being used.

Figure 6-14 **Adjust guides**

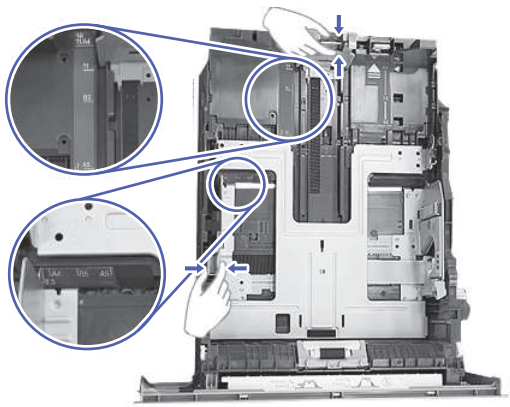

6. If the error persists, ensure the type and quality of the paper being used meets the HP specifications for the printer.

7. If the error persists, contact your HP-authorized service or support provider, or contact customer support at www.hp.com/go/contactHP.

13.B4 jam error in rear door (fuser)

Follow these troubleshooting steps in the order presented.

Recommended action for customers

Use the following procedure to check for paper in all possible jam locations inside the right door. When a jam occurs, the control panel might display a message and an animation that assists in clearing the jam.

- **13.B4.yz Jam in rear door.**

  y = A or D

z = Tray that paper was printing from.

- **13.B4.FF Jam in rear door.**

⚠ CAUTION: The fuser can be hot while the printer is in use. Wait for the fuser to cool before handling it.

1. Open the rear door.

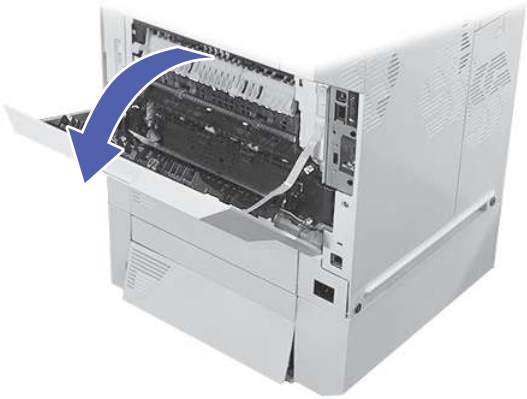

2. Gently remove any jammed paper.

⚠ CAUTION: The fuser can be hot while the printer is in use. Wait for the fuser to cool before handling it.

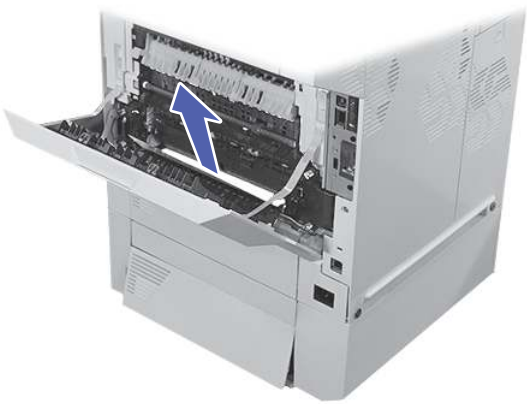

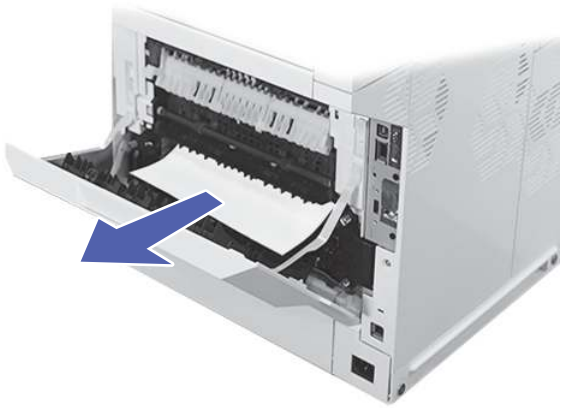

3. Close the rear door.
4. If the error persists, ensure the type and quality of the paper being used meets the HP specifications for the printer.
5. If the error persists, contact your HP-authorized service or support provider, or contact customer support at www.hp.com/go/contactHP.

13.B9 jam error in rear door (fuser)

Follow these troubleshooting steps in the order presented.

Recommended action for customers

Use the following procedure to check for paper in all possible jam locations inside the right door. When a jam occurs, the control panel might display a message and an animation that assists in clearing the jam.

- **13.B9.yz Jam in rear door**
- **13.FF.yz Jam in rear door**

⚠ CAUTION: The fuser can be hot while the printer is in use. Wait for the fuser to cool before handling it.

1. Open the rear door.

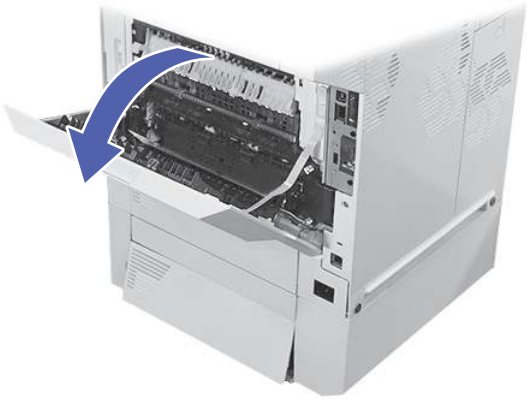

2. Gently remove any jammed paper.

⚠ CAUTION: The fuser can be hot while the printer is in use. Wait for the fuser to cool before handling it.

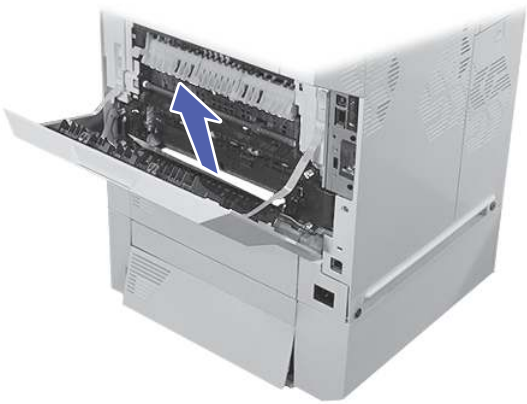

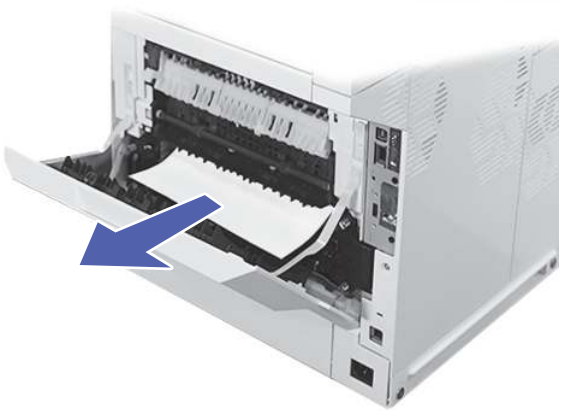

3. Close the rear door.
4. If the error persists, ensure the type and quality of the paper being used meets the HP specifications for the printer.
5. If the error persists, contact your HP-authorized service or support provider, or contact customer support at www.hp.com/go/contactHP.

13.D3 jam error in duplexer

Follow these troubleshooting steps in the order presented.

Recommended action for customers

Use the following procedure to check for paper in all possible jam locations inside the right door. When a jam occurs, the control panel might display a message and an animation that assists in clearing the jam.

- **13.D3.yz Jam in right door**

1. Pull the tray 2 completely out of the printer.

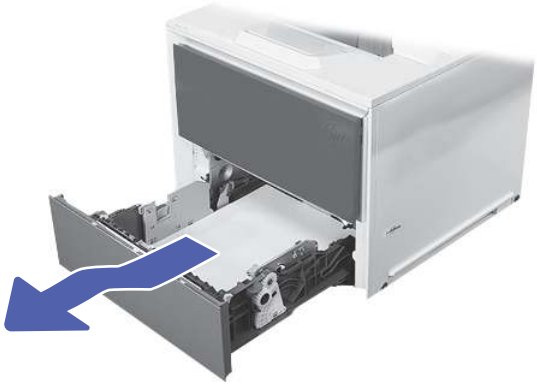

2. Remove any jammed or damaged sheets of paper seen.

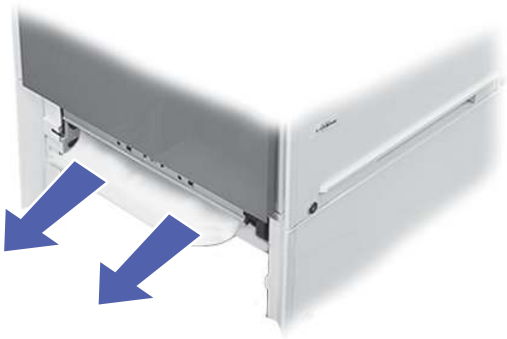

3. If no paper is found, lower the duplex path tray.

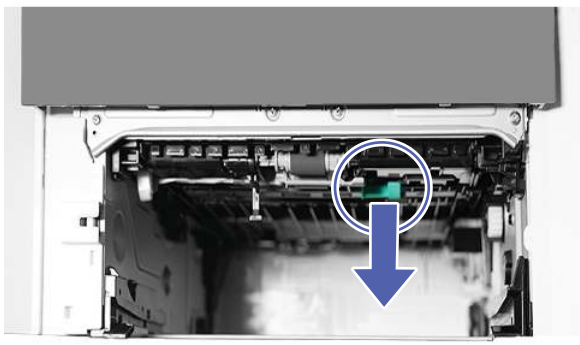

4. Remove paper from duplex path as needed.

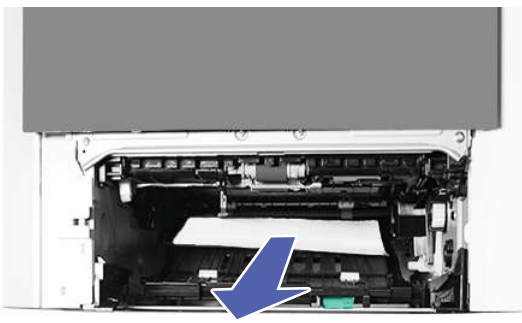

5. If no paper is found in the duplex tray area, open the rear door.

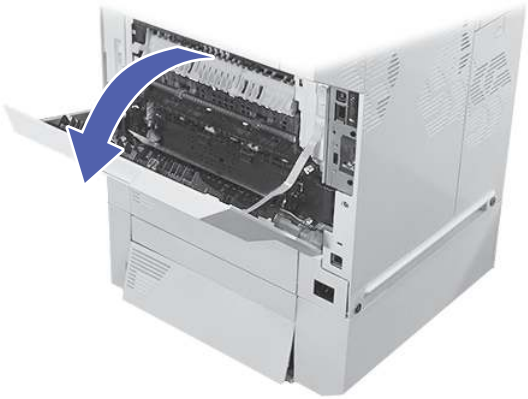

6. Gently remove any jammed paper.

⚠ **CAUTION:** The fuser can be hot while the printer is in use. Wait for the fuser to cool before handling it.

7. Close the rear door.
8. If the error persists, ensure the type and quality of the paper being used meets the HP specifications for the printer.
9. If the error persists, contact your HP-authorized service or support provider, or contact customer support at www.hp.com/go/contactHP.

13.E1 jam error in the output bin

Use the following procedure to check for paper in all possible jam locations in the output bin. When a jam occurs, the control panel displays an animation that assists in clearing the jam.

Recommended action for customers

When a jam occurs, the control panel displays a message and an animation that assists in clearing the jam.

- 13.E1.Dz, 13.E1.Az Jam in output bin

- 13.E1.FF Residual paper jam in output bin

z = paper type that is being printed on. This can be 0-9 or A-F.

1. If paper is visible in the output bin, grasp the leading edge and gently remove it.

2. Open the rear door.

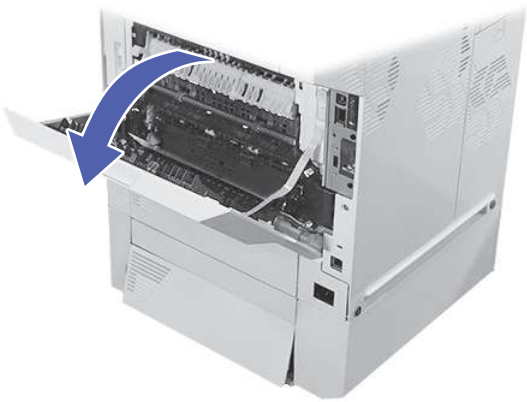

3. Gently remove any jammed paper.

⚠ CAUTION: The fuser can be hot while the printer is in use. Wait for the fuser to cool before handling it.

4. Close the rear door.
5. If the error persists, ensure the type and quality of the paper being used meets the HP specifications for the printer.
6. If the error persists, contact your HP-authorized service or support provider, or contact customer support at www.hp.com/go/contactHP.

Resolving mono print quality problems

Use the information below to troubleshoot print-quality and image-quality problems on mono (black and white) HP LaserJet Enterprise printers.

Introduction

The troubleshooting steps can help resolve the following defects:

- Blank pages
- Black pages
- Curled paper
- Dark or light bands
- Dark or light streaks
- Fuzzy print
- Gray background or dark print
- Light print
- Loose toner
- Missing toner
- Scattered dots of toner
- Skewed images
- Smears

- Streaks

Troubleshoot print quality

To resolve print-quality issues, try these steps in the order presented.

To troubleshoot specific image defects, see Troubleshoot image defects.

Update the printer firmware

Try upgrading the printer firmware.

For instructions, go to www.hp.com/support.

Print from a different software program

Try printing from a different software program.

If the page prints correctly, the problem is with the software program from which you were printing.

Check the paper-type setting for the print job

Check the paper type setting when printing from a software program and the printed pages have smears, fuzzy or dark print, curled paper, scattered dots of toner, loose toner, or small areas of missing toner.

Check the paper type setting on the control panel

Check the paper type setting on the printer control panel, and change the setting as needed.

1. Open and close the paper tray.
2. Follow the control panel prompts to confirm or modify the paper type and size settings for the tray.
3. Make sure the paper loaded meets specifications.
4. Adjust the humidity and resistance setting on the control panel to match the environment.
   a. Open the following menus:
      i. Settings
      ii. Copy/Print or Print
      iii. Print Quality
      iv. Adjust Paper Type
   b. Select the paper type that matches the type loaded in the tray.
   c. Use the arrows to increase or decrease the humidity and resistance setting.
5. Make sure the driver settings match the control panel settings.

NOTE: The print driver settings will override any control panel settings.

Check the paper type setting (Windows)

Check the paper type setting for Windows, and change the setting as needed.

NOTE: The print driver settings will override any control panel settings.

1. From the software program, select the **Print** option.
2. Select the printer, and then click the **Properties** or **Preferences** button.
3. Click the **Paper/Quality** tab.
4. From the **Paper Type** drop-down list, click the **More...** option.
5. Expand the list of **Type is:** options.
6. Expand the category of paper types that best describes your paper.
7. Select the option for the type of paper you are using, and click the **OK** button.
8. Click the **OK** button to close the **Document Properties** dialog box. In the **Print** dialog box, click the **OK** button to print the job.

Check the paper type setting (macOS)

Check the paper type setting for macOS, and change the setting as needed.

1. Click the **File** menu, and then click the **Print** option.
2. In the **Printer** menu, select the printer.
3. By default, the print driver displays the **Copies & Pages** menu. Open the menus drop-down list, and then click the **Finishing** menu.
4. Select a type from the **Media Type** drop-down list.
5. Click the **Print** button.

Check toner-cartridge status

Follow these steps to check the estimated life remaining in the toner cartridges and if applicable, the status of other replaceable maintenance parts.

Step one: Print the Supplies Status Page

The supplies status page indicates the cartridge status.

1. From the Home screen on the printer control panel, select the Reports menu.
2. Select the Configuration/Status Pages menu.
3. Select Supplies Status Page, and then select Print to print the page.

Step two: Check supplies status

Check the supplies status report as follows.

1. Look at the supplies status report to check the percent of life remaining for the toner cartridges and, if applicable, the status of other replaceable maintenance parts.

   Print quality problems can occur when using a toner cartridge that is at its estimated end of life. The supplies status page indicates when a supply level is very low. After an HP supply has reached the very low threshold, HP's premium protection warranty on that supply has ended.

   The toner cartridge does not need to be replaced now unless the print quality is no longer acceptable. Consider having a replacement available to install when print quality is no longer acceptable.

   If you determine that you need to replace a toner cartridge or other replaceable maintenance parts, the supplies status page lists the genuine HP part numbers.

2. Check to see if you are using a genuine HP cartridge.

   A genuine HP toner cartridge has the word "HP" on it, or has the HP logo on it. For more information on identifying HP cartridges go to www.hp.com/go/learnaboutsupplies.

Print a cleaning page

During the printing process paper, toner, and dust particles can accumulate inside the printer and can cause print-quality issues such as toner specks or spatter, smears, streaks, lines, or repeating marks.

Follow these steps to clean the printer paper path:

1. From the Home screen on the printer control panel, select the Support Tools menu.
2. Select the following menus:
   a. Maintenance
   b. Calibration/Cleaning
   c. Cleaning Page
3. Select Print to print the page.

   A **Cleaning...** message displays on the printer control panel. The cleaning process takes a few minutes to complete. Do not turn the printer off until the cleaning process has finished. When it is finished, discard the printed page.

Visually inspect the toner cartridge or cartridges

Follow these steps to inspect each toner cartridge:

1. Remove the toner cartridge from the printer, and verify that the sealing tape has been removed.
2. Check the memory chip for damage.
3. Examine the surface of the green imaging drum.

   ⚠ CAUTION: Do not touch the imaging drum. Fingerprints on the imaging drum can cause print-quality problems.

4. If you see any scratches, fingerprints, or other damage on the imaging drum, replace the toner cartridge.
5. Reinstall the toner cartridge and print a few pages to see if the problem has resolved.

Check paper and the printing environment

Use the following information to check the paper selection and the printing environment.

Step one: Use paper that meets HP specifications

Some print-quality problems arise from using paper that does not meet HP specifications.

- Always use a paper type and weight that this printer supports.
- Use paper that is of good quality and free of cuts, nicks, tears, spots, loose particles, dust, wrinkles, voids, staples, and curled or bent edges.
- Use paper that has not been previously printed on.
- Use paper that does not contain metallic material, such as glitter.
- Use paper that is designed for use in laser printers. Do not use paper that is designed only for use in Inkjet printers.
- Use paper that is not too rough. Using smoother paper generally results in better print quality.

Step two: Check the environment

The environment can directly affect print quality and is a common cause of print-quality or paper-feeding issues. Try the following solutions:

- Move the printer away from drafty locations, such as open windows or doors, or air-conditioning vents.
- Make sure the printer is not exposed to temperatures or humidity outside of printer specifications.
- Do not place the printer in a confined space, such as a cabinet.
- Place the printer on a sturdy, level surface.
- Remove anything that is blocking the vents on the printer. The printer requires good air flow on all sides, including the top.
- Protect the printer from airborne debris, dust, steam, grease, or other elements that can leave residue inside the printer.

Step three: Set the individual tray alignment

Follow these steps when text or images are not centered or aligned correctly on the printed page when printing from specific trays.

1. From the Home screen on the printer control panel, select the Settings menu.
2. Select the following menus:
   a. Copy/Print or Print
   b. Print Quality
   c. Image Registration
3. Select Tray, and then select the tray to adjust.
4. Select Print Test Page, and then follow the instructions on the printed pages.

5. Select Print Test Page again to verify the results, and then make further adjustments if necessary.

6. Select Done to save the new settings.

Try a different print driver

Try a different print driver when printing from a software program and the printed pages have unexpected lines in graphics, missing text, missing graphics, incorrect formatting, or substituted fonts.

Download a different print driver from the HP support Web site: http://www.hp.com/support/ljX60000dn.

Check the EconoMode settings

HP does not recommend the full-time use of EconoMode. If EconoMode is used full-time, the toner supply might outlast the mechanical parts in the toner cartridge. If print quality begins to degrade and is no longer acceptable, consider replacing the toner cartridge.

NOTE: This feature is available with the PCL 6 print driver for Windows. If you are not using that driver, you can enable the feature by using the HP Embedded Web Server.

Follow these steps if the entire page is too dark or too light.

1. From the software program, select the **Print** option.

2. Select the printer, and then click the **Properties** or **Preferences** button.

3. Click the **Paper/Quality** tab, and locate the **Print Quality** area.

4. If the entire page is too dark, use these settings:

   - Select the **600 dpi** option, if available.

   - Select the **EconoMode** check box to enable it.

   If the entire page is too light, use these settings:

   - Select the **FastRes 1200** option, if available.

   - Clear the **EconoMode** check box to disable it.

5. Click the **OK** button to close the **Document Properties** dialog box. In the **Print** dialog, click the **OK** button to print the job.

Adjust print density

Complete the following steps to adjust the print density.

1. From the Home screen on the printer control panel, select the Settings menu.

2. Open the following menus:

   a. Copy/Print

   b. Default Print Options

   c. Toner Density

3. Move the slider toward either Less or More to the desired density setting.

Troubleshoot image defects

Review examples of image defects and steps to resolve these defects.

Table 6-2 Image defects table quick reference

Sample	Description	Possible solutions
Table 6-9 Light print on page 114	Table 6-7 Gray background or dark print on page 113	Table 6-5 Blank page – No print on page 112 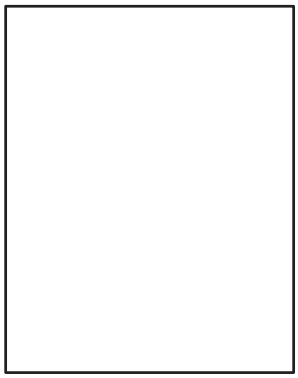
Table 6-4 Black page on page 111	Table 6-3 Banding defects on page 111 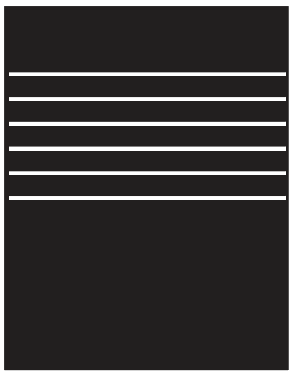	Table 6-11 Streak defects on page 115 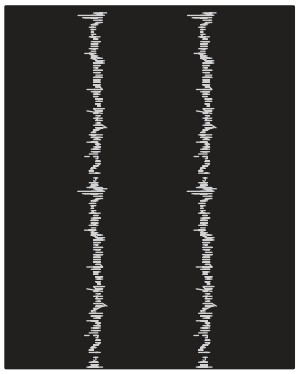

Table 6-2 Image defects table quick reference (continued)

Sample	Description	Possible solutions
Table 6-6 Fixing/fuser defects on page 112	Table 6-8 Image placement defects on page 113	Table 6-10 Output defects on page 114
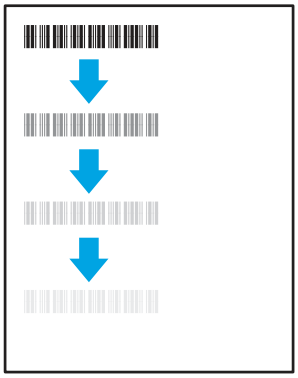		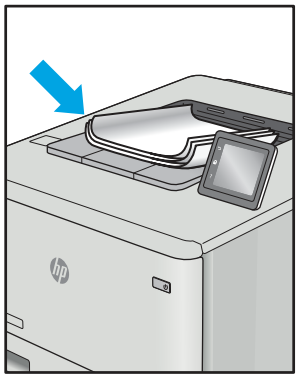

Image defects, no matter the cause, can often be resolved using the same steps. Use the following steps as a starting point for solving image defect issues.

1. Reprint the document. Print quality defects can be intermittent in nature or can go away completely with continued printing.
2. Check the condition of the cartridge or cartridges. If a cartridge is in a **Very Low** state (it has passed the rated life), replace the cartridge.
3. Make sure that the driver and tray print mode settings match the media that is loaded in the tray. Try using a different ream of media or a different tray. Try using a different print mode.
4. Make sure that the printer is within the supported operating temperature/humidity range.
5. Make sure that the paper type, size, and weight are supported by the printer. See support.hp.com for a list of the supported paper sizes and types for the printer.

NOTE: The term “fusing” refers to the part of the printing process where toner is affixed to paper.

The following examples depict letter-size paper that has passed through the printer short edge first.

Table 6-3 Banding defects

Sample	Description	Possible solutions
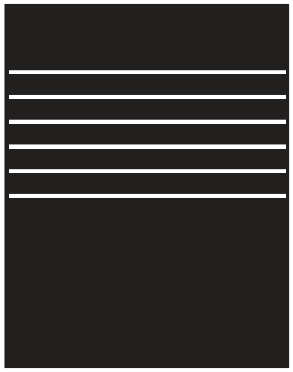	Dark or light lines which repeat down the length of the page, and are wide-pitch and/or impulse bands. They might be sharp or soft in nature. The defect displays only in areas of fill, not in text or sections with no printed content.	1. Reprint the document. 2. Try printing from another tray. 3. Replace the cartridge. 4. Use a different paper type. 5. **Enterprise models only:** From the Home screen on the printer control panel, go to the Adjust Paper Types menu, and then choose a print mode that is designed for a slightly heavier media than what you are using. This slows the print speed and might improve the print quality. 6. If the issue persists, go to support.hp.com.

Table 6-4 Black page

Sample	Description	Possible solutions
	The entire printed page is black.	1. Visually inspect the cartridge to check for damage. 2. Make sure that the cartridge is installed correctly. 3. Replace the cartridge. 4. If the issue persists, go to support.hp.com.

Table 6-5 Blank page – No print

Sample	Description	Possible solutions
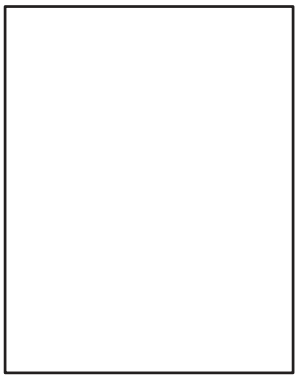	The page is completely blank and contains no printed content.	1. Make sure that the cartridges are genuine HP cartridges. 2. Make sure that the cartridge is installed correctly. 3. Print with a different cartridge. 4. Check the paper type in the paper tray and adjust the printer settings to match. If necessary, select a lighter paper type. 5. If the issue persists, go to support.hp.com.

Table 6-6 Fixing/fuser defects

Sample	Description	Possible solutions
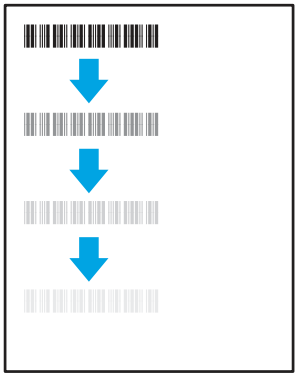	Slight shadows or offsets of the image are repeated down the page. The repeated image might fade with each recurrence.	1. Reprint the document. 2. Check the paper type in the paper tray and adjust the printer settings to match. If necessary, select a lighter weight paper type. 3. If the issue persists, go to support.hp.com.
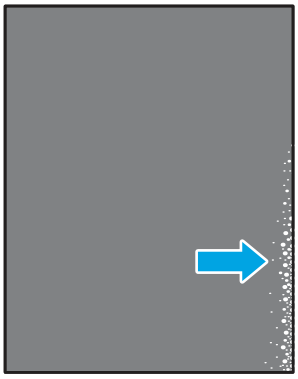	Toner rubs off along either edge of the page. This defect is more common at the edges of high-coverage jobs, and on light media types, but can occur anywhere on the page.	1. Reprint the document. 2. Check the paper type in the paper tray and adjust the printer settings to match. If necessary, select a heavier paper type. 3. **Enterprise models only:** From the printer control panel, go to the Edge-to-Edge menu and then select Normal. Reprint the document. 4. **Enterprise models only:** From the printer control panel, select Auto Include Margins and then reprint the document. 5. If the issue persists, go to support.hp.com.

Table 6-7 Gray background or dark print

Sample	Description	Possible solutions
	The image or text is darker than expected and/or the background is gray.	1. Make sure that the paper in the trays has not already been run through the printer. 2. Use a different paper type. 3. Reprint the document. 4. **Mono models only:** From the Home screen on the printer control panel, go to the Adjust Toner Density menu, and then adjust the toner density to a lower level. 5. Make sure that the printer is within the supported operating temperature and humidity range. 6. Replace the cartridge. 7. If the issue persists, go to support.hp.com.

Table 6-8 Image placement defects

Sample	Description	Possible solutions
	The image is not centered, or is skewed on the page. The defect occurs when the paper is not positioned properly as it is pulled from the tray and moves through the paper path.	1. Reprint the document. 2. Remove the paper and then reload the tray. Make sure that all the paper edges are even on all sides. 3. Make sure that the top of the paper stack is below the tray-full indicator. Do not overfill the tray. 4. Make sure that the paper guides are adjusted to the correct size for the paper. Do not adjust the paper guides tightly against the paper stack. Adjust them to the indentations or markings in the tray. 5. If the issue persists, go to support.hp.com.

Table 6-9 **Light print**

Sample	Description	Possible solutions
	The printed content is light or faded on the entire page.	1. Reprint the document. 2. Remove the cartridge, and then shake it to redistribute the toner. Reinsert the toner cartridges into the printer and close the cover. For a graphical representation of this procedure, see *Replace the toner cartridges*. 3. **Mono models only:** Make sure that the EconoMode setting is disabled, both at the printer control panel and in the print driver. 4. Make sure that the cartridge is installed correctly. 5. Print a Supplies Status Page and check the life and usage of the cartridge. 6. Replace the cartridge. 7. If the issue persists, go to support.hp.com.

Table 6-10 **Output defects**

Sample	Description	Possible solutions
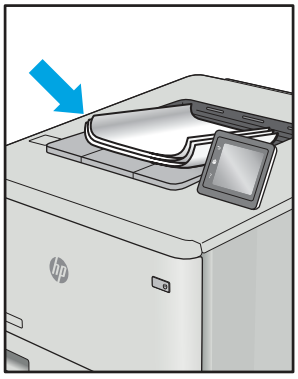	Printed pages have curled edges. The curled edge can be along the short or long side of the paper. Two types of curl are possible: • **Positive curl:** The paper curls toward the printed side. The defect occurs in dry environments or when printing high-coverage pages. • **Negative curl:** The paper curls away from the printed side. The defect occurs in high-humidity environments or when printing low-coverage pages.	1. Reprint the document. 2. **Positive curl:** From the printer control panel, select a heavier paper type. The heavier paper type creates a higher temperature for printing. **Negative curl:** From the printer control panel, select a lighter paper type. The lighter paper type creates a lower temperature for printing. Try storing the paper in a dry environment prior to use, or use freshly opened paper. 3. Print in duplex mode. 4. If the issue persists, go to support.hp.com.

Table 6-10 Output defects (continued)

Sample	Description	Possible solutions
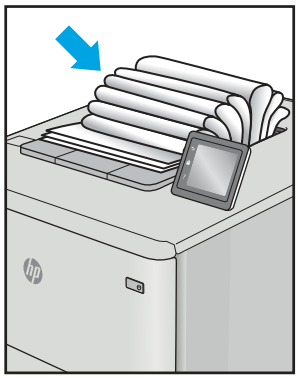	The paper does not stack well in the output tray. The stack might be uneven, skewed, or the pages might be pushed out of the tray and onto the floor. Any of the following conditions can cause this defect: • Extreme paper curl • The paper in the tray is wrinkled or deformed • The paper is a non-standard paper type, such as envelopes • The output tray is too full	1. Reprint the document. 2. Extend the output bin extension. 3. If the defect is caused by extreme paper curl, refer to the troubleshooting steps for "Output curl." 4. Use a different paper type. 5. Use freshly opened paper. 6. Remove the paper from the output tray before the tray gets too full. 7. If the issue persists, go to support.hp.com.

Table 6-11 Streak defects

Sample	Description	Possible solutions
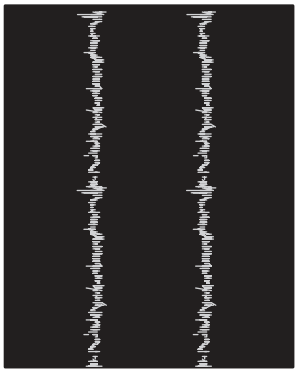	Light vertical streaks that usually span the length of the page. The defect displays only in areas of fill, not in text or sections with no printed content.	1. Reprint the document. 2. Remove the cartridge, and then shake it to redistribute the toner. Reinsert the toner cartridges into the printer and close the cover. For a graphical representation of this procedure, see *Replace the toner cartridges*. 3. If the issue persists, go to support.hp.com. NOTE: Both light and dark vertical streaks can occur when the printing environment is outside the specified range for temperature or humidity. Refer to your printer's environmental specifications for allowable temperature and humidity levels.

Table 6-11 Streak defects (continued)

Sample	Description	Possible solutions
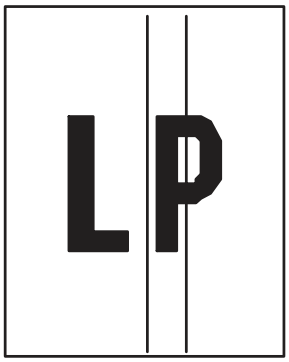	Dark vertical lines which occur down the length of the page. The defect might occur anywhere on the page, in areas of fill or in sections with no printed content.	1. Reprint the document. 2. Remove the cartridge, and then shake it to redistribute the toner. Reinsert the toner cartridges into the printer and close the cover. For a graphical representation of this procedure, see *Replace the toner cartridges*. 3. Print a cleaning page. 4. Check the toner level in the cartridge. 5. If the issue persists, go to support.hp.com.

Solve wired network problems

Contact your managed service representative. Make sure that you know your product model number, which appears on the product label on the back of the printer.

Solve wireless network problems

Contact your managed service representative. Make sure that you know your product model number, which appears on the product label on the back of the printer.

A Service and support

HP limited warranty statement

HP PRODUCT	DURATION OF LIMITED WARRANTY*
HP LaserJet Enterprise X60357, HP LaserJet Enterprise X60357dn	One-year, onsite warranty service

NOTE: *Warranty and support options vary by product, country, and local legal requirements. Go to support.hp.com to learn about HP award-winning service and support options in your region.

HP warrants to you, the end-user customer, this HP Limited Warranty applies only to HP branded products sold or leased a) from HP Inc., its subsidiaries, affiliates, authorized resellers, authorized distributors, or country distributors; and, b) with this HP Limited Warranty, that HP hardware and accessories will be free from defects in materials and workmanship after the date of purchase, for the period specified above. If HP receives notice of such defects during the warranty period, HP will, at its option, either repair or replace products which prove to be defective. Replacement products may be either new or equivalent in performance to new.

HP warrants to you that HP software will not fail to execute its programming instructions after the date of purchase, for the period specified above, due to defects in material and workmanship when properly installed and used. If HP receives notice of such defects during the warranty period, HP will replace software which does not execute its programming instructions due to such defects.

HP does not warrant that the operation of HP products will be uninterrupted or error free. If HP is unable, within a reasonable time, to repair or replace any product to a condition as warranted, you will be entitled to a refund of the purchase price upon prompt return of the product.

HP products may contain remanufactured parts equivalent to new in performance or may have been subject to incidental use.

Warranty does not apply to defects resulting from (a) improper or inadequate maintenance or calibration, (b) software, interfacing, parts or supplies not supplied by HP, (c) unauthorized modification or misuse, (d) operation outside of the published environmental specifications for the product, or (e) improper site preparation or maintenance.

TO THE EXTENT ALLOWED BY LOCAL LAW, THE ABOVE WARRANTIES ARE EXCLUSIVE AND NO OTHER WARRANTY OR CONDITION, WHETHER WRITTEN OR ORAL, IS EXPRESSED OR IMPLIED AND HP SPECIFICALLY DISCLAIMS ANY IMPLIED WARRANTIES OR CONDITIONS OF MERCHANTABILITY, SATISFACTORY QUALITY, AND FITNESS FOR A PARTICULAR PURPOSE. Some countries/regions, states or provinces do not allow limitations on the duration of an implied warranty, so the above limitation or exclusion might not apply to you. This warranty gives you specific legal rights and you might also have other rights that vary from country/region to country/region, state to state, or province to province.

HP's limited warranty is valid in any country/region or locality where HP has a support presence for this product and where HP has marketed this product. The level of warranty service you receive may vary according to local standards. HP will not alter form, fit or function of the product to make it operate in a country/region for which it was never intended to function for legal or regulatory reasons.

TO THE EXTENT ALLOWED BY LOCAL LAW, THE REMEDIES IN THIS WARRANTY STATEMENT ARE YOUR SOLE AND EXCLUSIVE REMEDIES. EXCEPT AS INDICATED ABOVE, IN NO EVENT WILL HP OR ITS SUPPLIERS BE LIABLE FOR LOSS OF DATA OR FOR DIRECT, SPECIAL, INCIDENTAL, CONSEQUENTIAL (INCLUDING LOST PROFIT OR DATA), OR OTHER DAMAGE, WHETHER BASED IN CONTRACT, TORT, OR OTHERWISE. Some countries/regions, states or provinces do not allow the exclusion or limitation of incidental or consequential damages, so the above limitation or exclusion may not apply to you.

THE WARRANTY TERMS CONTAINED IN THIS STATEMENT, EXCEPT TO THE EXTENT LAWFULLY PERMITTED, DO NOT EXCLUDE, RESTRICT OR MODIFY AND ARE IN ADDITION TO THE MANDATORY STATUTORY RIGHTS APPLICABLE TO THE SALE OF THIS PRODUCT TO YOU.

UK, Ireland, and Malta

The HP Limited Warranty is a commercial guarantee voluntarily provided by HP. The name and address of the HP entity responsible for the performance of the HP Limited Warranty in your country/region is as follows:

UK: HP Inc UK Limited, Earley West, 300 Thames Valley Park Drive, Reading, RG6 1PT, United Kingdom

Ireland: HP Technology Ireland Limited, Liffey Valley Office Campus, 1st FLOOR, BLOCK B Quarryvale, Co. Dublin D22 X0Y3 Ireland

Malta: HP Europe B.V., Amsterdam, Meyrin Branch, Route du Nant-d'Avril 150, 1217 Meyrin, Switzerland

United Kingdom: The HP Limited Warranty benefits apply in addition to any legal rights to a guarantee from seller of nonconformity of goods with the contract of sale. These rights expire six years from delivery of goods for products purchased in England or Wales and five years from delivery of goods for products purchased in Scotland. However various factors may impact your eligibility to receive these rights. For further information, please consult the following link: Consumer Legal Guarantee (http://www.hp.com/go/eu-legal) or you may visit the European Consumer Centers website (https://commission.europa.eu/live-work-travel-eu/consumer-rights-and-complaints/resolve-your-consumer-complaint/european-consumer-centres-network-ecc-net). Consumers have the right to choose whether to claim service under the HP Limited Warranty or against the seller under the legal guarantee.

Ireland: The HP Limited Warranty benefits apply in addition to any statutory rights from seller in relation to nonconformity of goods with the contract of sale. However various factors may impact your eligibility to receive these rights. Consumer statutory rights are not limited or affected in any manner by HP Care Pack. For further information, please consult the following link: Consumer Legal Guarantee (www.hp.com/go/eu-legal) or you may visit the European Consumer Centers website (https://commission.europa.eu/live-work-travel-eu/consumer-rights-and-complaints/resolve-your-consumer-complaint/european-consumer-centres-network-ecc-net). Consumers have the right to choose whether to claim service under the HP Limited Warranty or against the seller under the legal guarantee.

Malta: The HP Limited Warranty benefits apply in addition to any legal rights to a two-year guarantee from seller of nonconformity of goods with the contract of sale; however various factors may impact your eligibility to receive these rights. Consumer statutory rights are not limited or affected in any manner by the HP Limited Warranty. For further information, please consult the following link: Consumer Legal Guarantee (www.hp.com/go/eu-legal) or you may visit the European Consumer Centers website (https://commission.europa.eu/live-work-travel-eu/consumer-rights-and-complaints/resolve-your-consumer-complaint/european-consumer-centres-network-ecc-net). Consumers have the right to choose whether to claim service under the HP Limited Warranty or against the seller under two-year legal guarantee.

Austria, Belgium, Germany, Luxemburg. and Switzerland

Die beschränkte HP Herstellergarantie ist eine von HP auf freiwilliger Basis angebotene kommerzielle Garantie. Der Name und die Adresse der HP Gesellschaft, die in Ihrem Land für die Gewährung der beschränkten HP Herstellergarantie verantwortlich ist, sind wie folgt:

Schweiz: Die beschränkte HP Herstellergarantie ist eine von HP auf freiwilliger Basis angebotene kommerzielle Garantie. Der Name und die Adresse der HP Entität, die in Ihrem Land für die Gewährung der beschränkten HP Herstellergarantie verantwortlich ist, sind wie folgt:

Deutschland: HP Deutschland GmbH, Schickardstr. 32, D-71034 Böblingen

Österreich: HP Austria GmbH., Technologiestrasse 5, A-1120 Wien

Luxemburg: HP Luxembourg S.C.A., 75, Parc d'Activités Capellen, L-8308 Capellen

Belgien: HP Belgium BV, Hermeslaan 1, Building B, B-1831 Diegem, Unternehmensnummer 0597.618.285

Schweiz: HP Schweiz GmbH, Glatt Tower, Neue Winterthurerstrasse 99, 8304 Wallisellen

Deutschland: Die Rechte aus der beschränkten HP Herstellergarantie gelten zusätzlich zu den gesetzlichen Ansprüchen wegen Sachmängeln auf eine zweijährige Gewährleistung ab dem Lieferdatum. Ob Sie Anspruch auf diese Rechte haben, hängt von zahlreichen Faktoren ab. Die Rechte des Kunden sind in keiner Weise durch die beschränkte HP Herstellergarantie eingeschränkt bzw. betroffen. Weitere Hinweise finden Sie auf der folgenden Website: Gewährleistungsansprüche für Verbraucher (http://www.hp.com/go/eu-legal) oder Sie können die Website des Europäischen Verbraucherzentrums (https://commission.europa.eu/live-work-travel-eu/consumer-rights-and-complaints/resolve-your-consumer-complaint/european-consumer-centres-network-ecc-net) besuchen. Verbraucher haben das Recht zu wählen, ob sie eine Leistung von HP gemäß der beschränkten HP Herstellergarantie in Anspruch nehmen oder ob sie sich gemäß der gesetzlichen zweijährigen Haftung für Sachmängel (Gewährleistung) sich an den jeweiligen Verkäufer wenden.

Österreich, Luxemburg und Belgien: Die Rechte aus der beschränkten HP Herstellergarantie gelten zusätzlich zu den gesetzlichen Ansprüchen wegen Sachmängeln auf eine zweijährige Gewährleistung ab dem Lieferdatum. Ob Sie Anspruch auf diese Rechte haben, hängt von zahlreichen Faktoren ab. Die Rechte des Kunden sind in keiner Weise durch die beschränkte HP Herstellergarantie eingeschränkt bzw. betroffen. Weitere Hinweise finden Sie auf der folgenden Website: Gewährleistungsansprüche für Verbraucher (http://www.hp.com/go/eu-legal) oder Sie können die Website des Europäischen Verbraucherzentrums (https://commission.europa.eu/live-work-travel-eu/consumer-rights-and-complaints/resolve-your-consumer-complaint/european-consumer-centres-network-ecc-net) besuchen. Verbraucher haben das Recht zu wählen, ob sie eine Leistung von HP gemäß der beschränkten HP Herstellergarantie in Anspruch nehmen oder ob sie sich gemäß der gesetzlichen zweijährigen Haftung für Sachmängel (Gewährleistung) sich an den jeweiligen Verkäufer wenden.

Schweiz: Die beschränkte HP Herstellergarantie Vorteile gelten zusätzlich zu den rechtlichen Gewährleistungsansprüchen bei fehlerhaften Produkten aus dem Kaufvertrag. Ob Sie Anspruch auf diese Rechte haben, hängt von zahlreichen Faktoren ab. Die Rechte des Kunden sind in keiner Weise durch die beschränkte HP Herstellergarantie eingeschränkt bzw. betroffen.

Verbraucher haben das Recht zu wählen, ob sie die beschränkte HP Herstellergarantie beanspruchen wollen oder sich mit den Gewährleistungsansprüchen an den Verkäufer richten wollen

Belgium, France, Luxemburg, and Switzerland

La garantie limitée HP est une garantie commerciale fournie volontairement par HP. Voici les coordonnées de l'entité HP responsable de l'exécution de la garantie limitée HP dans votre pays:

France: HP France SAS, société par actions simplifiée identifiée sous le numéro 448 694 133 RCS Nanterre, Meudon Campus Bât. 1, 14 rue de la Verrerie 92190 Meudon, tel. 09 69 32 04 35 (produits des gammes grand public et gaming) ou 01 70 48 53 19 (produits de la gamme professionnelle). Autres options de contact : WhatsApp et Messenger.

G.D. Luxembourg: HP Luxembourg S.C.A., 75, Parc d'Activités Capellen, L-8308 Capellen

Belgique: HP Belgium BV, Hermeslaan 1, Building B, B-1831 Diegem, numéro d'entreprise 0597.618.285

Suisse: HP Suisse Sàrl, Glatt Tower, Neue Winterthurerstrasse 99, 8304 Wallisellen

France: La Garantie Limitée HP s'applique sans préjudice du droit pour le consommateur de bénéficier de la garantie légale de conformité dans les conditions prévues aux articles L. 217-1 à L. 217-32 du code de la consommation et de celle relative aux vices cachés dans les conditions prévues aux articles 1641 à 1649 du code civil. Le consommateur peut ainsi choisir d'exercer ses droits au titre de la Garantie Limitée HP ou, auprès du vendeur, au titre des garanties légales dont les modalités de mises en œuvre sont rappelées ci-dessous.

Le consommateur dispose d'un délai de deux ans à compter de la délivrance du bien pour obtenir la mise en oeuvre de la garantie légale de conformité en cas d'apparition d'un défaut de conformité. Durant ce délai, le consommateur n'est tenu d'établir que l'existence du défaut de conformité et non la date d'apparition de celui-ci.

Lorsque le contrat de vente du bien prévoit la fourniture d'un contenu numérique ou d'un service numérique de manière continue pendant une durée supérieure à deux ans, la garantie légale est applicable à ce contenu numérique ou ce service numérique tout au long de la période de fourniture prévue. Durant ce délai, le consommateur n'est tenu d'établir que l'existence du défaut de conformité affectant le contenu numérique ou le service numérique et non la date d'apparition de celui-ci.

La garantie légale de conformité emporte obligation pour le professionnel, le cas échéant, de fournir toutes les mises à jour nécessaires au maintien de la conformité du bien.

La garantie légale de conformité donne au consommateur droit à la réparation ou au remplacement du bien dans un délai de trente jours suivant sa demande, sans frais et sans inconvénient majeur pour lui.

Si le bien est réparé dans le cadre de la garantie légale de conformité, le consommateur bénéficie d'une extension de six mois de la garantie initiale. Si le consommateur demande la réparation du bien, mais que le vendeur impose le remplacement, la garantie légale de conformité est renouvelée pour une période de deux ans à compter de la date de remplacement du bien.

Le consommateur peut obtenir une réduction du prix d'achat en conservant le bien ou mettre fin au contrat en se faisant rembourser intégralement contre restitution du bien, si:

1° Le professionnel refuse de réparer ou de remplacer le bien;

2° La réparation ou le remplacement du bien intervient après un délai de trente jours;

3° La réparation ou le remplacement du bien occasionne un inconvénient majeur pour le consommateur, notamment lorsque le consommateur supporte définitivement les frais de reprise ou d'enlèvement du bien non conforme, ou s'il supporte les frais d'installation du bien réparé ou de remplacement;

4° La non-conformité du bien persiste en dépit de la tentative de mise en conformité du vendeur restée infructueuse.

Le consommateur a également droit à une réduction du prix du bien ou à la résolution du contrat lorsque le défaut de conformité est si grave qu'il justifie que la réduction du prix ou la résolution du contrat soit immédiate. Le consommateur n'est alors pas tenu de demander la réparation ou le remplacement du bien au préalable.

Le consommateur n'a pas droit à la résolution de la vente si le défaut de conformité est mineur.

Toute période d'immobilisation du bien en vue de sa réparation ou de son remplacement suspend la garantie qui restait à courir jusqu'à la délivrance du bien remis en état.

Les droits mentionnés ci-dessus résultent de l'application des articles L. 217-1 à L. 217-32 du code de la consommation.

Le vendeur qui fait obstacle de mauvaise foi à la mise en oeuvre de la garantie légale de conformité encourt une amende civile d'un montant maximal de 300 000 euros, qui peut être porté jusqu'à 10 % du chiffre d'affaires moyen annuel (article L. 241-5 du code de la consommation).

Le consommateur bénéficie également de la garantie légale des vices cachés en application des articles 1641 à 1649 du code civil, pendant une durée de deux ans à compter de la découverte du défaut. Cette garantie donne droit à une réduction de prix si le bien est conservé ou à un remboursement intégral contre restitution du bien.

Pour de plus amples informations, veuillez consulter le lien suivant: Garanties légales accordées au consommateur (http://www.hp.com/go/eu-legal) ou vous pouvez également consulter le site Web des Centres européens des consommateurs (https://commission.europa.eu/live-work-travel-eu/consumer-rights-and-complaints/resolve-your-consumer-complaint/european-consumer-centres-network-ecc-net).

G.D. Luxembourg et Belgique: Les avantages de la garantie limitée HP s'appliquent en complément des droits dont vous disposez au titre de la garantie de non-conformité des biens avec le contrat de vente. Cependant, de nombreux facteurs peuvent avoir un impact sur le bénéfice de ces droits. Vos droits en tant que consommateur au titre de ces garanties ne sont en aucune façon limités ou affectés par la garantie limitée HP. Pour de plus amples informations, veuillez consulter le lien suivant: Garanties légales accordées au consommateur (http://www.hp.com/go/eu-legal) ou vous pouvez également consulter le site Web des Centres

européens des consommateurs (https://commission.europa.eu/live-work-travel-eu/consumer-rights-and-complaints/resolve-your-consumer-complaint/european-consumer-centres-network-ecc-net). Les consommateurs ont le droit de choisir de réclamer un service sous la garantie limitée HP ou auprès du vendeur au cours d'une garantie légale de deux ans.

Suisse: Les avantages de la garantie limitée HP s'appliquent en complément des droits dont vous disposez au titre de la garantie de non-conformité des biens avec le contrat de vente. Cependant, de nombreux facteurs peuvent avoir un impact sur le bénéfice de ces droits. Vos droits en tant que consommateur au titre de ces garanties ne sont en aucune façon limités ou affectés par la garantie limitée HP. Pour de plus amples informations, veuillez consulter le lien suivant: Garanties légales accordées au consommateur (http://www.hp.com/go/eu-legal) ou vous pouvez également consulter le site Web des Centres européens des consommateurs (https://commission.europa.eu/live-work-travel-eu/consumer-rights-and-complaints/resolve-your-consumer-complaint/european-consumer-centres-network-ecc-net). Les consommateurs ont le droit de choisir de réclamer un service sous la garantie limitée HP ou auprès du vendeur au cours d'une garantie légale.

Italy

La Garanzia limitata HP è una garanzia commerciale fornita volontariamente da HP. Di seguito sono indicati nome e indirizzo della società HP responsabile della fornitura dei servizi coperti dalla Garanzia limitata HP nel vostro Paese:

Italia: HP Italy S.r.l., Via G. Di Vittorio 9, 20063 Cernusco S/Naviglio

I vantaggi della Garanzia limitata HP vengono concessi ai consumatori in aggiunta ai diritti derivanti dalla garanzia di due anni fornita dal venditore in caso di non conformità dei beni rispetto al contratto di vendita. Tuttavia, diversi fattori possono avere un impatto sulla possibilita' di beneficiare di tali diritti. I diritti spettanti ai consumatori in forza della garanzia legale non sono in alcun modo limitati, né modificati dalla Garanzia limitata HP. Per ulteriori informazioni, si prega di consultare il seguente link: Garanzia legale per i clienti (http://www.hp.com/go/eu-legal), oppure visitare il sito Web dei Centri europei per i consumatori (https://commission.europa.eu/live-work-travel-eu/consumer-rights-and-complaints/resolve-your-consumer-complaint/european-consumer-centres-network-ecc-net). I consumatori hanno il diritto di scegliere se richiedere un servizio usufruendo della Garanzia limitata HP oppure rivolgendosi al venditore per far valere la garanzia legale di due anni.

Spain

Su Garantía limitada de HP es una garantía comercial voluntariamente proporcionada por HP. El nombre y dirección de las entidades HP que proporcionan la Garantía limitada de HP (garantía comercial adicional del fabricante) en su país es:

España: HP Printing and Computing Solutions S.L. Calle Jose Echegaray 18 Las Rozas, 28232 Madrid

Los beneficios de la Garantía limitada de HP son adicionales a la garantía legal de 2 años a la que los consumidores tienen derecho a recibir del vendedor en virtud del contrato de compraventa; sin embargo, varios factores pueden afectar su derecho a recibir los beneficios bajo dicha garantía legal. A este respecto, la Garantía limitada de HP no limita o afecta en modo alguno los derechos legales del consumidor (http://www.hp.com/go/eu-legal). Para más información, consulte el siguiente enlace: Garantía legal del consumidor o puede visitar el sitio web de los Centros europeos de los consumidores (https://commission.europa.eu/live-work-travel-eu/consumer-rights-and-complaints/resolve-your-consumer-complaint/european-consumer-centres-network-ecc-net). Los clientes tienen derecho a elegir si reclaman un servicio acogiéndose a la Garantía limitada de HP o al vendedor de conformidad con la garantía legal de dos años.

Denmark

Den begrænsede HP-garanti er en garanti, der ydes frivilligt af HP. Navn og adresse på det HP-selskab, der er ansvarligt for HP's begrænsede garanti i dit land, er som følger:

Danmark: HP Inc Danmark ApS, Engholm Parkvej 8, 3450, Allerød

Den begrænsede HP-garanti gælder i tillæg til eventuelle juridiske rettigheder, for en toårig garanti fra sælgeren af varer, der ikke er i overensstemmelse med salgsaftalen, men forskellige faktorer kan dog påvirke din ret til at opnå disse rettigheder. Forbrugerens lovbestemte rettigheder begrænses eller påvirkes ikke på nogen måde af den begrænsede HP-garanti. Se nedenstående link for at få yderligere oplysninger: Forbrugerens juridiske garanti (http://www.hp.com/go/eu-legal) eller du kan besøge De Europæiske Forbrugercentres websted (https://commission.europa.eu/live-work-travel-eu/consumer-rights-and-complaints/resolve-your-consumer-complaint/european-consumer-centres-network-ecc-net). Forbrugere har ret til at vælge, om de vil gøre krav på service i henhold til HP's begrænsede garanti eller hos sælger i henhold til en toårig juridisk garanti.

Norway

HPs garanti er en begrenset og kommersiell garanti som HP selv har valgt å tilby. Følgende lokale selskap innestår for garantien:

Norge: HP Norge AS, Rolfbuktveien 4b, 1364 Fornebu

HPs garanti kommer i tillegg til det mangelsansvar HP har i henhold til norsk forbrukerkjøpslovgivning, hvor reklamasjonsperioden kan være to eller fem år, avhengig av hvor lenge salgsgjenstanden var ment å vare. Ulike faktorer kan imidlertid ha betydning for om du kvalifiserer til å kreve avhjelp iht slikt mangelsansvar. Forbrukerens lovmessige rettigheter begrenses ikke av HPs garanti. Hvis du vil ha mer informasjon, kan du klikke på følgende kobling: Juridisk garanti for forbruker (http://www.hp.com/go/eu-legal) eller du kan besøke nettstedet til de europeiske forbrukersentrene (https://commission.europa.eu/live-work-travel-eu/consumer-rights-and-complaints/resolve-your-consumer-complaint/european-consumer-centres-network-ecc-net). Forbrukere har retten til å velge å kreve service under HPs garanti eller iht selgerens lovpålagte mangelsansvar.

Sweden

HP:s begränsade garanti är en kommersiell garanti som tillhandahålls frivilligt av HP. Namn och adress till det HP-företag som ansvarar för HP:s begränsade garanti i ditt land är som följer:

Sverige: HP PPS Sverige AB, SE-169 73 Stockholm

Fördelarna som ingår i HP:s begränsade garanti gäller utöver de lagstadgade rättigheterna till tre års garanti från säljaren angående varans bristande överensstämmelse gentemot köpeavtalet, men olika faktorer kan påverka din rätt att utnyttja dessa rättigheter. Konsumentens lagstadgade rättigheter varken begränsas eller påverkas på något sätt av HP:s begränsade garanti. Mer information får du om du följer denna länk: Lagstadgad garanti för konsumenter (http://www.hp.com/go/eu-legal) eller så kan du gå till European Consumer Centers webbplats (https://commission.europa.eu/live-work-travel-eu/consumer-rights-and-complaints/resolve-your-consumer-complaint/european-consumer-centres-network-ecc-net). Konsumenter har rätt att välja om de vill ställa krav enligt HP:s begränsade garanti eller på säljaren enligt den lagstadgade treåriga garantin.

Portugal

A Garantia Limitada HP é uma garantia comercial fornecida voluntariamente pela HP. O nome e a morada da entidade HP responsável pela prestação da Garantia Limitada HP no seu país são os seguintes:

Portugal: HPCP – Computing and Printing Portugal, Unipessoal, Lda., Edificio D. Sancho I, Quinta da Fonte, Porto Salvo, Lisboa, Oeiras, 2740 244

As vantagens da Garantia Limitada HP aplicam-se cumulativamente com quaisquer direitos decorrentes da legislação aplicável à garantia de dois anos do vendedor, relativa a defeitos do produto e constante do contrato de venda. Existem, contudo, vários fatores que poderão afetar a sua elegibilidade para beneficiar de tais direitos. Os direitos legalmente atribuídos aos consumidores não são limitados ou afetados de forma alguma pela Garantia Limitada HP. Para mais informações, consulte a ligação seguinte: Garantia legal do consumidor (http://www.hp.com/go/eu-legal) ou visite o Web site da Rede dos Centros Europeus do Consumidor (https://commission.europa.eu/live-work-travel-eu/consumer-rights-and-complaints/resolve-your-consumer-complaint/european-consumer-centres-network-ecc-net). Os consumidores têm o direito de escolher se pretendem reclamar assistência ao abrigo da Garantia Limitada HP ou contra o vendedor ao abrigo de uma garantia jurídica de dois anos.

Greece and Cyprus

Η Περιορισμένη εγγύηση HP είναι μια εμπορική εγγύηση η οποία παρέχεται εθελοντικά από την HP. Η επωνυμία και η διεύθυνση του νομικού προσώπου HP που παρέχει την Περιορισμένη εγγύηση HP στη χώρα σας είναι η εξής:

Ελλάδα /Κύπρος: HP Printing and Personal Systems Hellas EPE, Tzavella 1-3, 15232 Chalandri, Attiki

Ελλάδα /Κύπρος: HP Συστήματα Εκτύπωσης και Προσωπικών Υπολογιστών Ελλάς Εταιρεία Περιορισμένης Ευθύνης, Tzavella 1-3, 15232 Chalandri, Attiki

Τα προνόμια της Περιορισμένης εγγύησης HP ισχύουν επιπλέον των νόμιμων δικαιωμάτων για διετή εγγύηση έναντι του Πωλητή για τη μη συμμόρφωση των προϊόντων με τις συνομολογημένες συμβατικά ιδιότητες, ωστόσο η άσκηση των δικαιωμάτων σας αυτών μπορεί να εξαρτάται από διάφορους παράγοντες. Τα νόμιμα δικαιώματα των καταναλωτών δεν περιορίζονται ούτε επηρεάζονται καθ' οιονδήποτε τρόπο από την Περιορισμένη εγγύηση HP. Για περισσότερες πληροφορίες, συμβουλευτείτε την ακόλουθη τοποθεσία web: Νόμιμη εγγύηση καταναλωτή (http://www.hp.com/go/eu-legal) ή μπορείτε να επισκεφτείτε την τοποθεσία web των Ευρωπαϊκών Κέντρων Καταναλωτή (https://commission.europa.eu/live-work-travel-eu/consumer-rights-and-complaints/resolve-your-consumer-complaint/european-consumer-centres-network-ecc-net). Οι καταναλωτές έχουν το δικαίωμα να επιλέξουν αν θα αξιώσουν την υπηρεσία στα πλαίσια της Περιορισμένης εγγύησης HP ή από τον πωλητή στα πλαίσια της νόμιμης εγγύησης δύο ετών.

Hungary

A HP korlátozott jótállás egy olyan kereskedelmi jótállás, amelyet a HP a saját elhatározásából biztosít. Az egyes országokban a HP mint gyártó által vállalt korlátozott jótállást biztosító vállalatok neve és címe a jótállási jegyen vagy a termékhez csatolt egyéb dokumentumban található, vagy ennek hiányában erről az eladó ad tájékoztatást.

Budapest, Hungary, (BUD): HP Inc Magyarország Kft. 1117 Budapest, Újbuda Allee Corner Október huszonharmadika u. 8-10.

A HP korlátozott jótállásban biztosított jogok azokon a jogokon felül illetik meg Önt, amelyek a termékeknek az adásvételi szerződés szerinti minőségére vonatkozó kétéves, jogszabályban foglalt eladói szavatosságból, továbbá ha az Ön által vásárolt termékre alkalmazandó, a jogszabályban foglalt kötelező eladói jótállásból erednek, azonban számos körülmény hatással lehet arra, hogy ezek a jogok

Önt megilletik-e. További információért kérjük, keresse fel a következő webhelyet: Jogi Tájékoztató Fogyasztóknak (http://www.hp.com/go/eu-legal) vagy látogassa meg az Európai Fogyasztói Központok webhelyét (https://commission.europa.eu/live-work-travel-eu/consumer-rights-and-complaints/resolve-your-consumer-complaint/european-consumer-centres-network-ecc-net). A fogyasztóknak jogában áll, hogy megválasszák, hogy a jótállással kapcsolatos igényüket a HP korlátozott jótállás alapján vagy a kétéves, jogszabályban foglalt eladói szavatosság, illetve, ha alkalmazandó, a jogszabályban foglalt kötelező eladói jótállás alapján érvényesítik.

Czech Republic

Omezená záruka HP je obchodní zárukou dobrovolně poskytovanou společností HP. Názvy a adresy společností skupiny HP, které odpovídají za plnění omezené záruky HP ve vaší zemi, jsou následující:

Česká republika: HP Inc Czech Republic s. r. o., Za Brumlovkou 5/1559, 140 00 Praha 4

Výhody, poskytované omezenou zárukou HP, se uplatňují jako doplňek k jakýmkoli právním nárokům na dvouletou záruku poskytnutou prodejcem v případě nesouladu zboží s kupní smlouvou. Váš nárok na uznání těchto práv však může záviset na mnohých faktorech. Omezená záruka HP žádným způsobem neomezuje ani neovlivňuje zákonná práva zákazníka. Další informace získáte kliknutím na následující odkaz: Zákonná záruka spotřebitele (http://www.hp.com/go/eu-legal) případně můžete navštívit webové stránky Evropského spotřebitelského centra (https://commission.europa.eu/live-work-travel-eu/consumer-rights-and-complaints/resolve-your-consumer-complaint/european-consumer-centres-network-ecc-net). Spotřebitelé mají právo se rozhodnout, zda chtějí službu reklamovat v rámci omezené záruky HP nebo v rámci zákonem stanovené dvouleté záruky u prodejce.

Slovakia

Obmedzená záruka HP je obchodná záruka, ktorú spoločnosť HP poskytuje dobrovoľne. Meno a adresa subjektu HP, ktorý zabezpečuje plnenie vyplývajúce z Obmedzenej záruky HP vo vašej krajine:

Slovenská republika: HP Inc Slovakia, s.r.o., Galvaniho 7, 821 04 Bratislava

Výhody Obmedzenej záruky HP sa uplatnia vedľa prípadných zákazníkových zákonných nárokov voči predávajúcemu z vád, ktoré spočívajú v nesúlade vlastností tovaru s jeho popisom podľa predmetnej zmluvy. Možnosť uplatnenia takých prípadných nárokov však môže závisieť od rôznych faktorov. Služby Obmedzenej záruky HP žiadnym spôsobom neobmedzujú ani neovplyvňujú zákonné práva zákazníka, ktorý je spotrebiteľom. Ďalšie informácie nájdete na nasledujúcom prepojení: Zákonná záruka spotrebiteľa (http://www.hp.com/go/eu-legal), prípadne môžete navštíviť webovú lokalitu európskych zákazníckych stredísk (https://commission.europa.eu/live-work-travel-eu/consumer-rights-and-complaints/resolve-your-consumer-complaint/european-consumer-centres-network-ecc-net). Spotrebitelia majú právo zvoliť si, či chcú uplatniť servis v rámci Obmedzenej záruky HP alebo počas zákonnej dvojročnej záručnej lehoty u predajcu.

Poland

Ograniczona gwarancja HP to komercyjna gwarancja udzielona dobrowolnie przez HP. Nazwa i adres podmiotu HP odpowiedzialnego za realizację Ograniczonej gwarancji HP w Polsce:

Polska: HP Inc Polska sp. z o.o., ul. Szturmowa 2a, 02-678 Warszawa, wpisana do rejestru przedsiębiorców prowadzonego przez Sąd Rejonowy dla m.st. Warszawy w Warszawie, XIII Wydział Gospodarczy Krajowego Rejestru Sądowego, pod numerem KRS 0000546115, NIP 5213690563, REGON 360916326, BDO 000006211, kapitał zakładowy 480.500 PLN.

Świadczenia wynikające z Ograniczonej gwarancji HP stanowią dodatek do praw przysługujących nabywcy w związku z dwuletnią odpowiedzialnością sprzedawcy z tytułu niezgodności towaru

z umową (rękojmia). Niemniej, na możliwość korzystania z tych praw mają wpływ różne czynniki. Ograniczona gwarancja HP w żaden sposób nie ogranicza praw konsumenta ani na nie nie wpływa. Więcej informacji można znaleźć pod następującym łączem: Gwarancja prawna konsumenta (http://www.hp.com/go/eu-legal), można także odwiedzić stronę internetową Europejskiego Centrum Konsumenckiego (https://commission.europa.eu/live-work-travel-eu/consumer-rights-and-complaints/resolve-your-consumer-complaint/european-consumer-centres-network-ecc-net). Konsumenci mają prawo wyboru co do możliwosci skorzystania albo z usług gwarancyjnych przysługujących w ramach Ograniczonej gwarancji HP albo z uprawnień wynikających z dwuletniej rękojmi w stosunku do sprzedawcy.

Bulgaria

Ограничената гаранция на HP представлява търговска гаранция, доброволно предоставяна от HP. Името и адресът на дружеството на HP за вашата страна, отговорно за предоставянето на гаранционната поддръжка в рамките на Ограничената гаранция на HP, са както следва:

HP Inc Bulgaria EOOD (Ейч Пи Инк България ЕООД), HP Inc България ЕООД, Бизнес Парк София, 1766 София, сграда 10, България

Предимствата на Ограничената гаранция на HP се прилагат в допълнение към всички законови права за двугодишна гаранция от продавача при несъответствие на стоката с договора за продажба. Въпреки това, различни фактори могат да окажат влияние върху условията за получаване на тези права. Законовите права на потребителите не са ограничени или засегнати по никакъв начин от Ограничената гаранция на HP. За допълнителна информация, моля вижте Правната гаранция на потребителя (http://www.hp.com/go/eu-legal) или посетете уебсайта на Европейския потребителски център (https://commission.europa.eu/live-work-travel-eu/consumer-rights-and-complaints/resolve-your-consumer-complaint/european-consumer-centres-network-ecc-net). Потребителите имат правото да избират дали да претендират за извършване на услуга в рамките на Ограничената гаранция на HP или да потърсят такава от търговеца в рамките на двугодишната правна гаранция.

Romania

Garanția limitată HP este o garanție comercială furnizată în mod voluntar de către HP. Numele și adresa entității HP răspunzătoare de punerea în aplicare a Garanției limitate HP în țara dumneavoastră sunt următoarele:

România: HP Inc Romania SRL, 5 Fabrica de Glucoza Str., Building F, Ground Floor and Floor 8, 2nd District, București

Beneficiile Garanției limitate HP se aplică suplimentar față de orice drepturi privind garanția de doi ani oferită de vânzător pentru neconformitatea bunurilor cu contractul de vânzare; cu toate acestea, diverși factori pot avea impact asupra eligibilității dvs. de a beneficia de aceste drepturi. Drepturile legale ale consumatorului nu sunt limitate sau afectate în vreun fel de Garanția limitată HP. Pentru informații suplimentare consultați următorul link: garanția acordată consumatorului prin lege (http://www.hp.com/go/eu-legal) sau puteți accesa site-ul Centrul European al Consumatorilor (https://commission.europa.eu/live-work-travel-eu/consumer-rights-and-complaints/resolve-your-consumer-complaint/european-consumer-centres-network-ecc-net). Consumatorii au dreptul să aleagă dacă să pretindă despăgubiri în cadrul Garanței limitate HP sau de la vânzător, în cadrul garanției legale de doi ani.

Belgium and the Netherlands

De Beperkte Fabrieksgarantie van HP is een commerciële garantie vrijwillig verstrekt door HP. De naam en het adres van de HP-entiteit die verantwoordelijk is voor het uitvoeren van de Beperkte Fabrieksgarantie van HP in uw land is als volgt:

Nederland: HP Nederland B.V., Startbaan 16, 1187 XR Amstelveen

België: HP Belgium BV, Hermeslaan 1, Building B, B-1831 Diegem, ondernemingsnummer 0597.618.285

De voordelen van de Beperkte Fabrieksgarantie van HP vormen een aanvulling op de wettelijke garantie voor consumenten gedurende twee jaren na de levering te verlenen door de verkoper bij een gebrek aan conformiteit van de goederen met de relevante koopovereenkomst. Niettemin kunnen diverse factoren een impact hebben op de eventuele aanspraak van de consument op deze wettelijke rechten. De wettelijke rechten van de consument worden op geen enkele wijze beperkt of beïnvloed door de Beperkte Fabrieksgarantie van HP. Raadpleeg voor meer informatie de volgende webpagina: Wettelijke garantie voor consumenten (http://www.hp.com/go/eu-legal) of u kan de website van het Europees Consumenten Centrum bezoeken (https://commission.europa.eu/live-work-travel-eu/consumer-rights-and-complaints/resolve-your-consumer-complaint/european-consumer-centres-network-ecc-net). Consumenten hebben het recht om te kiezen tussen enerzijds de Beperkte Fabrieksgarantie van HP of anderzijds het aanspreken van de verkoper ter uitoefening van de wettelijke garantie.

Finland

HP:n rajoitettu takuu on HP:n vapaaehtoisesti antama kaupallinen takuu. HP:n myöntämästä takuusta maassanne vastaavan HP:n edustajan yhteystiedot ovat:

Suomi: HP Finland Oy, Piispankalliontie, FIN - 02200 Espoo

HP:n takuun edut ovat voimassa mahdollisten kuluttajansuojalakiin perustuvien oikeuksien lisäksi sen varalta, että tuote ei vastaa myyntisopimusta. Saat lisätietoja seuraavasta linkistä: Kuluttajansuoja (http://www.hp.com/go/eu-legal) tai voit käydä Euroopan kuluttajakeskuksen sivustolla (https://commission.europa.eu/live-work-travel-eu/consumer-rights-and-complaints/resolve-your-consumer-complaint/european-consumer-centres-network-ecc-net). Kuluttajilla on oikeus vaatia virheen korjausta HP:n takuun ja kuluttajansuojan perusteella HP:lta tai myyjältä.

Slovenia

Omejena garancija HP je prostovoljna trgovska garancija, ki jo zagotavlja podjetje HP. Ime in naslov poslovne enote HP, ki je odgovorna za omejeno garancijo HP v vaši državi, sta naslednja:

Slovenija: HP Europe B.V. Meyrin Branch, Route du Nant-d'Avril 150, 1217 Meyrin, Switzerland

Ugodnosti omejene garancije HP veljajo poleg zakonskih pravic, ki ob sklenitvi kupoprodajne pogodbe izhajajo iz dveletne garancije prodajalca v primeru neskladnosti blaga, vendar lahko na izpolnjevanje pogojev za uveljavitev pravic vplivajo različni dejavniki. Omejena garancija HP nikakor ne omejuje strankinih z zakonom predpisanih pravic in ne vpliva nanje. Za dodatne informacije glejte naslednjo povezavo: Strankino pravno jamstvo (http://www.hp.com/go/eu-legal); ali pa obiščite spletno mesto evropskih središč za potrošnike (https://commission.europa.eu/live-work-travel-eu/consumer-rights-and-complaints/resolve-your-consumer-complaint/european-consumer-centres-network-ecc-net). Potrošniki imajo pravico izbrati, ali bodo uveljavljali pravice do storitev v skladu z omejeno garancijo HP ali proti prodajalcu v skladu z dvoletno zakonsko garancijo.

Croatia

HP ograničeno jamstvo komercijalno je dobrovoljno jamstvo koje pruža HP. Ime i adresa HP subjekta odgovornog za HP ograničeno jamstvo u vašoj državi:

Hrvatska: HP Computing and Printing d.o.o. za računalne i srodne aktivnosti, Radnička cesta 41, 10000 Zagreb

Pogodnosti HP ograničenog jamstva vrijede zajedno uz sva zakonska prava na dvogodišnje jamstvo kod bilo kojeg prodavača s obzirom na nepodudaranje robe s ugovorom o kupnji. Međutim, razni faktori mogu utjecati na vašu mogućnost ostvarivanja tih prava. HP ograničeno jamstvo ni na koji način ne utječe niti ne ograničava zakonska prava potrošača. Dodatne informacije potražite na ovoj adresi: Zakonsko jamstvo za potrošače (http://www.hp.com/go/eu-legal) ili možete posjetiti web-mjesto Europskih potrošačkih centara (https://commission.europa.eu/live-work-travel-eu/consumer-rights-and-complaints/resolve-your-consumer-complaint/european-consumer-centres-network-ecc-net). Potrošači imaju pravo odabrati žele li ostvariti svoja potraživanja u sklopu HP ograničenog jamstva ili pravnog jamstva prodavača u trajanju ispod dvije godine.

Latvia

HP ierobežotā garantija ir komercgarantija, kuru brīvprātīgi nodrošina HP. HP uzņēmums, kas sniedz HP ierobežotās garantijas servisa nodrošinājumu jūsu valstī:

Latvija: HP Finland Oy, PO Box 515, 02201 Espoo, Finland

HP ierobežotās garantijas priekšrocības tiek piedāvātas papildus jebkurām likumīgajām tiesībām uz pārdevēja un/vai ražotāju nodrošinātu divu gadu garantiju gadījumā, ja preces neatbilst pirkuma līgumam, tomēr šo tiesību saņemšanu var ietekmēt vairāki faktori. HP ierobežotā garantija nekādā veidā neierobežo un neietekmē patērētāju likumīgās tiesības. Lai iegūtu plašāku informāciju, izmantojiet šo saiti: Patērētāju likumīgā garantija (http://www.hp.com/go/eu-legal) vai arī Eiropas Patērētāju tiesību aizsardzības centra tīmekļa vietni (https://commission.europa.eu/live-work-travel-eu/consumer-rights-and-complaints/resolve-your-consumer-complaint/european-consumer-centres-network-ecc-net). Patērētājiem ir tiesības izvēlēties, vai pieprasīt servisa nodrošinājumu saskaņā ar HP ierobežoto garantiju, vai arī pārdevēja sniegto divu gadu garantiju.

Lithuania

HP ribotoji garantija yra HP savanoriškai teikiama komercinė garantija. Toliau pateikiami HP bendrovių, teikiančių HP garantiją (gamintojo garantiją) jūsų šalyje, pavadinimai ir adresai:

Lietuva: HP Finland Oy, PO Box 515, 02201 Espoo, Finland

HP ribotoji garantija papildomai taikoma kartu su bet kokiomis kitomis įstatymais nustatytomis teisėmis į pardavėjo suteikiamą dviejų metų laikotarpio garantiją dėl prekių atitikties pardavimo sutarčiai, tačiau tai, ar jums ši teisė bus suteikiama, gali priklausyti nuo įvairių aplinkybių. HP ribotoji garantija niekaip neapriboja ir neįtakoja įstatymais nustatytų vartotojo teisių. Daugiau informacijos rasite paspaudę šią nuorodą: Teisinė vartotojo garantija (http://www.hp.com/go/eu-legal) arba apsilankę Europos vartotojų centro internetinėje svetainėje (https://commission.europa.eu/live-work-travel-eu/consumer-rights-and-complaints/resolve-your-consumer-complaint/european-consumer-centres-network-ecc-net). Vartotojai turi teisę prašyti atlikti techninį aptarnavimą pagal HP ribotąją garantiją arba pardavėjo teikiamą dviejų metų įstatymais nustatytą garantiją.

Estonia

HP piiratud garantii on HP poolt vabatahtlikult pakutav kaubanduslik garantii. HP piiratud garantii eest vastutab HP üksus aadressil:

Eesti: HP Finland Oy, PO Box 515, 02201 Espoo, Finland

HP piiratud garantii rakendub lisaks seaduses ettenähtud müüjapoolsele kaheaastasele garantiile, juhul kui toode ei vasta müügilepingu tingimustele. Siiski võib esineda asjaolusid, mille puhul teie jaoks need õigused ei pruugi kehtida. HP piiratud garantii ei piira ega mõjuta mingil moel tarbija seadusjärgseid õigusi. Lisateavet leiate järgmiselt lingilt: tarbija õiguslik garantii (http://www.hp.com/go/eu-legal) või võite külastada Euroopa tarbijakeskuste

veebisaiti (https://commission.europa.eu/live-work-travel-eu/consumer-rights-and-complaints/resolve-your-consumer-complaint/european-consumer-centres-network-ecc-net). Tarbijal on õigus valida, kas ta soovib kasutada HP piiratud garantiid või seadusega ette nähtud müüjapoolset kaheaastast garantiid.

Limited Warranty Statement for HP Print Cartridges, Imaging Drums, and Imaging Units for use with HP LaserJet Printers, HP Laser Printers and Samsung Branded Laser Printers

This product is covered by the HP Commercial/Limited Warranty in countries/regions authorized for use/distribution. For complete warranty details, see: hp.com/toner/info.

Long life consumable and maintenance kit limited warranty statement

This HP product is warranted to be free from defects in materials and workmanship until the earlier of a) the printer providing a low-life indicator on the control panel, or b) the expiration of the warranty period. Replacement Preventative Maintenance kits or LLCs products carry a 90 day parts only limited warranty, from the last purchase date.

This warranty does not apply to products that (a) have been refurbished, remanufactured or tampered with in any way, (b) experience problems resulting from misuse, improper storage, or operation outside of the published environmental specifications for the printer product or (c) exhibit wear from ordinary use.

To obtain warranty service, please return the product to place of purchase (with a written description of the problem) or contact HP customer support. At HP's option, HP will either replace products that prove to be defective or refund your purchase price.

TO THE EXTENT ALLOWED BY LOCAL LAW, THE ABOVE WARRANTY IS EXCLUSIVE AND NO OTHER WARRANTY OR CONDITION, WHETHER WRITTEN OR ORAL, IS EXPRESSED OR IMPLIED. HP SPECIFICALLY DISCLAIMS ANY IMPLIED WARRANTIES OR CONDITIONS OF MERCHANTABILITY, SATISFACTORY QUALITY, AND FITNESS FOR A PARTICULAR PURPOSE.

TO THE EXTENT ALLOWED BY LOCAL LAW, IN NO EVENT WILL HP OR ITS SUPPLIERS BE LIABLE FOR DIRECT, SPECIAL, INCIDENTAL, CONSEQUENTIAL (INCLUDING LOST PROFIT OR DATA), OR OTHER DAMAGE, WHETHER BASED IN CONTRACT, TORT, OR OTHERWISE.

THE WARRANTY TERMS CONTAINED IN THIS STATEMENT, EXCEPT TO THE EXTENT LAWFULLY PERMITTED, DO NOT EXCLUDE, RESTRICT OR MODIFY AND ARE IN ADDITION TO THE MANDATORY STATUTORY RIGHTS APPLICABLE TO THE SALE OF THE PRODUCT TO YOU.

HP policy on non-HP supplies

HP cannot recommend the use of non-HP toner cartridges, either new or remanufactured.

NOTE: For HP printer products, the use of a non-HP toner cartridge or a refilled toner cartridge does not affect either the warranty to the customer or any HP support contract with the customer. However, if product failure or damage is attributable to the use of a non-HP toner cartridge or refilled toner cartridge, HP will charge its standard time and materials charges to service the product for the particular failure or damage.

HP anticounterfeit Web site

Go to www.hp.com/go/anticounterfeit when you install an HP cartridge and the control-panel message indicates the cartridge is non-HP. HP will help determine if the cartridge is genuine and take steps to resolve the problem.

Your cartridge might not be a genuine HP cartridge if you notice the following:

- The supplies status page indicates that a non-HP supply is installed.
- You are experiencing a high number of problems with the cartridge.
- The cartridge does not look like it usually does (for example, the packaging differs from HP packaging).

Data stored on the toner cartridge

The HP toner cartridges used with this product contain a memory chip that assists in the operation of the product.

In addition, this memory chip collects a limited set of information about the usage of the product, which might include the following: the date when the toner cartridge was first installed, the date when the toner cartridge was last used, the number of pages printed using the toner cartridge, the page coverage, the printing modes used, any printing errors that might have occurred, and the product model. This information helps HP design future products to meet our customers' printing needs.

The data collected from the toner cartridge memory chip does not contain information that can be used to identify a customer or user of the toner cartridge or their product.

HP collects a sampling of the memory chips from toner cartridges returned to HP's free return and recycling program (HP Planet Partners: www.hp.com/hprecycle). The memory chips from this sampling are read and studied in order to improve future HP products. HP partners who assist in recycling this toner cartridge might have access to this data, as well.

Any third party possessing the toner cartridge might have access to the anonymous information on the memory chip.

End User License Agreement

READ CAREFULLY BEFORE USING THIS SOFTWARE EQUIPMENT: This End-User License Agreement ("EULA") is a legal agreement between (a) you (either an individual or a single entity) and (b) HP Inc. ("HP") that governs your use of the Sign-In Once application installed on or made available by HP for use with your printing device (the “Software”).

An amendment or addendum to this EULA may accompany the HP Product.

RIGHTS IN THE SOFTWARE ARE OFFERED ONLY ON THE CONDITION THAT YOU AGREE TO ALL TERMS AND CONDITIONS OF THIS EULA. BY INSTALLING, COPYING, DOWNLOADING, OR OTHERWISE USING THE SOFTWARE, YOU AGREE TO BE BOUND BY THE TERMS OF THIS EULA. IF YOU DO NOT ACCEPT THESE LICENSE TERMS, YOUR SOLE REMEDY IS TO IMMEDIATELY STOP USING SOFTWARE AND TO UNINSTALL THE PRODUCT FROM YOUR DEVICE.

THIS EULA IS A GLOBAL AGREEMENT AND IS NOT SPECIFIC TO ANY PARTICULAR COUNTRY, STATE OR TERRITORY. IF YOU ACQUIRED THE SOFTWARE AS A CONSUMER WITHIN THE MEANING OF RELEVANT CONSUMER LEGISLATION IN YOUR COUNTRY, STATE OR TERRITORY, THEN DESPITE ANYTHING TO THE CONTRARY IN THIS EULA, NOTHING IN THIS EULA AFFECTS ANY NON EXCLUDABLE STATUTORY

RIGHTS OR REMEDIES THAT YOU MAY HAVE UNDER SUCH CONSUMER LEGISLATION AND THIS EULA IS SUBJECT TO THOSE RIGHTS AND REMEDIES. REFER TO SECTION 17 FOR FURTHER INFORMATION ON YOUR CONSUMER RIGHTS.

1. **GRANT OF LICENSE**. HP grants you the following rights provided you comply with all terms and conditions of this EULA. In the case you are representing an entity or organization, the same terms and conditions in this Section 1 shall also apply with respect to the use, copying, and storage of the Software on the devices of your respective entity or organization.

    a. Use. You may use one copy of the Software on your device for the purpose of accessing and using the Software. You may not separate component parts of the Software for use on more than one device. You do not have the right to distribute the Software, nor do you have the right to modify the Software or disable any licensing or control feature of the Software. You may load the Software into the temporary memory (RAM)of your device for purposes of using the Software.

    b. Storage. You may copy the Software into the local memory or storage device of your device.

    c. Copying. You may make archival or back-up copies of the Software, provided the copy contains all of the original Software's proprietary notices and that it is used only for back-up purposes.

    d. Reservation of Rights. HP and its suppliers reserve all rights not expressly granted to you in this EULA.

    e. Freeware. Notwithstanding the terms and conditions of this EULA, all or any portion of the Software which constitutes non-proprietary HP software or software provided under public license by third parties ("Freeware"), is licensed to you subject to the terms and conditions of the software license agreement or other documentation accompanying such Freeware at the time of download, installation, or use of the Freeware. Use of the Freeware by you shall be governed entirely by the terms and conditions of such license.

2. **UPGRADES**. To use Software identified as an upgrade, you must first be licensed for the original Software identified by HP as eligible for the upgrade. After upgrading, you may no longer use the original Software Product that formed the basis for your upgrade eligibility.

3. **ADDITIONAL SOFTWARE**. This EULA applies to updates or supplements to the original Software provided by HP unless HP provides other terms along with the update or supplement. In case of a conflict between such terms, the other terms will prevail.

4. **TRANSFER**.

    a. Third Party. The initial user of the Software may make a one-time transfer of the Software to another end user. Any transfer must include all component parts, media, printed materials, this EULA, and if applicable, the Certificate of Authenticity. The transfer may not be an indirect transfer, such as a consignment. Prior to the transfer, the end user receiving the transferred product must agree to all the EULA terms. Upon transfer of the Software, your license is automatically terminated.

    b. Restrictions. You may not rent, lease or lend the Software or use the Software for commercial timesharing or bureau use. You may not sublicense, assign or transfer the license or Software except as expressly provided in this EULA.

5. **PROPRIETARY RIGHTS**. All intellectual property rights in the Software and user documentation are owned by HP or its suppliers and are protected by law, including but not limited to United States copyright, trade secret, and trademark law, as well as other applicable laws and international treaty provisions. You shall not remove any product identification, copyright notices or proprietary restrictions from the Software.

6. **LIMITATION ON REVERSE ENGINEERING**. You may not reverse engineer, decompile, or disassemble the Software, except and only to the extent that the right to do so is mandated under applicable law notwithstanding this limitation or it is expressly provided for in this EULA.

7. **TERM**. This EULA is effective unless terminated or rejected. This EULA will also terminate upon conditions set forth elsewhere in this EULA or if you fail to comply with any term or condition of this EULA.

8. **ACCOUNT SET-UP**.

   a. You must register and establish an account on HP ID in order to use the Software. It is your responsibility to obtain and maintain all equipment, services and software needed for access to and use of the HP ID account, any applications linked via this Software, and your device(s), as well as paying any applicable charges.

   b. YOU ARE SOLELY AND FULLY RESPONSIBLE FOR MAINTAINING THE CONFIDENTIALITY OF ANY USERNAMES AND PASSWORDS COLLECTED BY THE SOFTWARE. You must notify HP immediately of any unauthorized use of your HP ID account or any other breach of security related to this Software or the device(s) it is installed on.

9. **NOTICE OF DATA COLLECTION.** HP may collect usernames, passwords, device IP addresses, and/or other authentication information used by you to access HP ID and the various applications connected via this Software. HP may use this data to optimize Software performance based on user preferences, provide support and maintenance, and assure security and software integrity. You can read more about the data collection in the sections titled "What Data We Collect" and "How We Use Data" in the HP Privacy Statement.

10. **DISCLAIMER OF WARRANTIES**. TO THE MAXIMUM EXTENT PERMITTED BY APPLICABLE LAW, HP AND ITS SUPPLIERS PROVIDE THE SOFTWARE "AS IS" AND WITH ALL FAULTS, AND HEREBY DISCLAIM ALL OTHER WARRANTIES, DUTIES, AND CONDITIONS, EITHER EXPRESS, IMPLIED, OR STATUTORY, INCLUDING, BUT NOT LIMITED TO, WARRANTIES: (i) OF TITLE AND NON-INFRINGEMENT; (ii) OF MERCHANTABILITY; (iii) OF FITNESS FOR A PARTICULAR PURPOSE; (iv) THAT THE SOFTWARE WILL FUNCTION WITH NON-HP SUPPLIES OR ACCESSORIES; AND (v), OF LACK OF VIRUSES ALL WITH REGARD TO THE SOFTWARE. Some states/jurisdictions do not allow exclusion of implied warranties or limitations on the duration of implied warranties, so the above disclaimer may not apply to you in its entirety.

11. **LIMITATION OF LIABILITY**. Subject to local law, notwithstanding any damages that you might incur, the entire liability of HP and any of its suppliers under any provision of this EULA and your exclusive remedy for all of the foregoing shall be limited to the greater of the amount actually paid by you separately for the Software or U.S. $5.00. TO THE MAXIMUM EXTENT PERMITTED BY APPLICABLE LAW, IN NO EVENT SHALL HP OR ITS SUPPLIERS BE LIABLE FOR ANY SPECIAL, INCIDENTAL, INDIRECT, OR CONSEQUENTIAL DAMAGES WHATSOEVER (INCLUDING, BUT NOT LIMITED TO, DAMAGES FOR LOSS OF PROFITS OR CONFIDENTIAL OR OTHER INFORMATION, FOR BUSINESS INTERRUPTION, FOR PERSONAL INJURY, OR FOR LOSS OF PRIVACY) ARISING OUT OF OR IN ANY WAY RELATED TO THE USE OF OR INABILITY TO USE THE SOFTWARE, OR OTHERWISE IN CONNECTION WITH ANY PROVISION OF THIS EULA, EVEN IF HP OR ANY SUPPLIER HAS BEEN ADVISED OF THE POSSIBILITY OF SUCH DAMAGES AND EVEN IF THE REMEDY FAILS OF ITS ESSENTIAL PURPOSE. Some states/jurisdictions do not allow the exclusion or limitation of incidental or consequential damages, so the above limitation or exclusion may not apply to you.

12. **U.S. GOVERNMENT CUSTOMERS**. Consistent with FAR 12.211 and 12.212, Commercial Computer Software, Computer Software Documentation, and Technical Data for Commercial Items are licensed to the U.S. Government under HP's standard commercial license.

13. **COMPLIANCE WITH EXPORT LAWS**. You shall comply with all laws and regulations of the United States and other countries ("Export Laws") to assure that the Software is not (1) exported, directly or indirectly, in violation of Export Laws, or (2) used for any purpose prohibited by Export Laws, including, without limitation, nuclear, chemical, or biological weapons proliferation.

14. **CAPACITY AND AUTHORITY TO CONTRACT**. You represent that you are of the legal age of majority in your state of residence and, if applicable, you are duly authorized by your employer to enter into this contract.

15. **APPLICABLE LAW**. This EULA is governed by the laws of the State of California, U.S.A.

16. **ENTIRE AGREEMENT**. Unless you have entered into a separate license agreement for the Software, this EULA (including any addendum or amendment to this EULA which is included with the HP Product) is the entire agreement between you and HP relating to the Software and it supersedes all prior or contemporaneous oral or written communications, proposals and representations with respect to the Software or any other subject matter covered by this EULA. To the extent the terms of any HP policies or programs for support services conflict with the terms of this EULA, the terms of this EULA shall control.

17. **CONSUMER RIGHTS**. Consumers in some countries, states or territories may have the benefit of certain statutory rights and remedies under consumer legislation in respect of which HP's liability cannot lawfully be excluded or limited. If you acquired the Software as a consumer within the meaning of relevant consumer legislation in your country, state or territory, the provisions of this EULA (including the disclaimers of warranties, limitations and exclusions of liability) must be read subject to applicable law and apply only to the maximum extent permitted by that applicable law.

    Australian Consumers: If you acquired the Software as a consumer within the meaning of the 'Australian Consumer Law' under the Australian Competition and Consumer Act 2010 (Cth) then despite any other provision of this EULA:

    a. the Software comes with guarantees that cannot be excluded under the Australian Consumer Law, including that goods will be of acceptable quality and services will be supplied with due care and skill. You are entitled to a replacement or refund for a major failure and compensation for any other reasonably foreseeable loss or damage. You are also entitled to have the Software repaired or replaced if it is not of acceptable quality and the failure does not amount to a major failure

    b. nothing in this EULA excludes, restricts or modifies any right or remedy, or any guarantee, warranty or other term or condition implied or imposed by the Australian Consumer Law which cannot be lawfully excluded or limited; and

    c. the benefits provided to you by the express warranties in this EULA are in addition to other rights and remedies available to you under the Australian Consumer Law. Your rights under the Australian Consumer Law prevail to the extent that they are inconsistent with any limitations contained in the express warranty.

    The Software may be capable of retaining user-generated data. HP hereby provides you with notice that if HP repairs your Software, that repair may result in the loss of that data. To the full extent permitted by law, the limitations and exclusions of HP's liability in this EULA apply in respect of any such loss of data.

    If you think that you are entitled to any warranty under this agreement or any of the above remedies, please contact HP:

Table A-1

HP PPS Australia Pty Ltd

Table A-1 (continued)

	Building F, 1 Homebush Bay Drive
	Rhodes, NSW 2138
	Australia

To initiate a support request or warranty claim, please call 13 10 47 (within Australia) or +61 2 8278 1039 (if dialing internationally) or visit www.hp.com.au and select the “Support” tab for the most current customer service options.

If you are a consumer within the meaning of the Australia Consumer Law and you are purchasing the Software or warranty and support services for the Software which are not of a kind ordinarily acquired for personal, domestic or household use or consumption, then despite any other provision of this EULA, HP limits its liability for failure to comply with a consumer guarantee as follows:

a. provision of warranty or support services for the Software: to any one or more of the following: re-supply of the services or payment of the costs of having the services re-supplied;

b. provision of the Software: to any one or more of the following: replacement of the Software or the supply of equivalent software; repair of the Software; payment of the costs of replacing the Software or of acquiring equivalent software; or payment of the costs of having the Software repaired; and

c. otherwise, to the maximum extent permitted by law.

New Zealand Consumers: In New Zealand, the Software comes with guarantees that cannot be excluded under the Consumer Guarantees Act 1993. In New Zealand, Consumer Transaction means a transaction involving a person who is purchasing goods for personal, domestic or household use or consumption and not for the purpose of a business. New Zealand consumers who are purchasing goods for personal, domestic or household use or consumption and not for the purpose of a business ("New Zealand Consumers") are entitled to repair, replacement or refund for a failure and compensation for other reasonably foreseeable loss or damage. A New Zealand Consumer (as defined above) may recover the costs of returning the product to the place of purchase if there is a breach of the New Zealand consumer law; furthermore, if it will be of significant cost to the New Zealand Consumer to return the goods to HP then HP will collect such goods at its own cost. Where any supply of products or services is for business purposes, you agree that the Consumer Guarantees Act 1993 does not apply and that given the nature and value of the transaction, this is fair and reasonable.

© Copyright 2019 HP Development Company, L.P.

The information contained herein is subject to change without notice. All other product names mentioned herein may be trademarks of their respective companies. To the extent permitted by applicable law, the only warranties for HP products and services are set forth in the express warranty statements accompanying such products and services. Nothing herein should be construed as constituting an additional warranty. To the extent permitted by applicable law, HP shall not be liable for technical or editorial errors or omissions contained herein.

Version: April 2019

Customer self-repair warranty service

HP products are designed with many Customer Self Repair (CSR) parts to minimize repair time and allow for greater flexibility in performing defective parts replacement. If during the diagnosis period, HP identifies that the repair can be accomplished by the use of a CSR part, HP will ship that part directly to you for replacement. There are two categories of CSR parts: 1) Parts for which customer self repair is mandatory. If you request HP to replace these parts, you will be charged for the travel and labor costs of this service. 2) Parts for which customer self repair is optional. These parts are also designed for Customer Self Repair. If, however, you require that HP replace them for you, this may be done at no additional charge under the type of warranty service designated for your product.

Based on availability and where geography permits, CSR parts will be shipped for next business day delivery. Same-day or four-hour delivery may be offered at an additional charge where geography permits. If assistance is required, you can call the HP Technical Support Center and a technician will help you over the phone. HP specifies in the materials shipped with a replacement CSR part whether a defective part must be returned to HP. In cases where it is required to return the defective part to HP, you must ship the defective part back to HP within a defined period of time, normally five (5) business days. The defective part must be returned with the associated documentation in the provided shipping material. Failure to return the defective part may result in HP billing you for the replacement. With a customer self repair, HP will pay all shipping and part return costs and determine the courier/carrier to be used.

Customer support

Get telephone support for your country/region Have the product name, serial number, date of purchase, and problem description ready.	Country/region phone numbers are on the flyer that was in the box with your product or at www.hp.com/support/.
Get 24-hour Internet support, and download software utilities and drivers	http://www.hp.com/support/ljX60000dn
Order additional HP service or maintenance agreements	www.hp.com/go/carepack
Register your product	www.register.hp.com

B Environmental product stewardship program

Protecting the environment

HP is committed to providing quality products in an environmentally sound manner. This product has been designed with several attributes to minimize impacts on our environment.

Battery information

This product may contain a:

- Poly-carbonmonofluoride lithium (BR type) or
- Manganese dioxide lithium (CR type)

battery that may require special handling at end-of-life.

NOTE: NOTE for CR type only: Perchlorate material - special handling may apply. See http://dtsc.ca.gov/hazardouswaste/perchlorate.

Weight: ~3 g

Location: On motherboard

User Removable: No

廢電池請回收

For recycling information, you can contact www.hp.com/hprecycle or contact your local authorities or the Electronics Industries Alliance: http://www.eiae.org.

Battery Notice for Brazil (for printers with non-removable battery)

A bateria deste equipamento não foi projetada para ser removida pelo cliente.

Chemical substances

HP is committed to providing our customers with information about the chemical substances in our products as needed to comply with legal requirements such as REACH (Regulation EC No 1907/2006 of the European Parliament and the Council). A chemical information report for this product can be found at: www.hp.com/go/reach.

Electronic hardware recycling

HP encourages customers to recycle used electronic hardware. For more information about recycling programs go to: www.hp.com/hprecycle.

EPEAT

EPEAT is an Electronic Product Environmental Assessment Tool used to evaluate the effects of a product on the environment.

HP products are designed to meet EPEAT criteria. Click here for information on HP's EPEAT registered products.

For more information on EPEAT, go to EPEAT.net.

Material restrictions

This HP product does not contain added mercury.

Material Safety Data Sheet (MSDS)

Material Safety Data Sheets (MSDS) for supplies containing chemical substances (for example, toner) can be obtained by accessing the HP Web site at http://www.hp.com/go/ecodata.

Ozone production

The airborne emissions of ozone for this product has been measured according to a standardized protocol* and when these emissions data are applied to an anticipated high-use scenario in an office workspace**, HP has determined there is no appreciable amount of ozone generated during printing and the levels are well within current indoor air quality standards and guidelines.

* Test method for the determination of emissions from hardcopy devices with respect to awarding the environmental label for office devices with printing function; RAL-UZ 219 - BAM January, 2021

** Based on ozone concentration when printing 2 hours per day in 30.6 cubic meter room with a ventilation rate of 0.68 air changes per hour with HP printing supplies

Paper

This product is capable of using recycled paper and lightweight paper (EcoFFICIENT™) when the paper meets the guidelines outlined in the *HP LaserJet Printer Family Print Media Guide*. This product is suitable for the use of recycled paper and lightweight paper (EcoFFICIENT™) according to EN12281:2002.

Paper use

This product's duplex feature (manual or automatic) and N-up printing (multiple pages printed on one page) capability can reduce paper usage and the resulting demands on natural resources.

Plastics

Plastic parts over 25 grams are marked according to international standards that enhance the ability to identify plastics for recycling purposes at the end of the product's life.

Power consumption

Power usage drops significantly while in Ready, Sleep, or Off mode, which saves natural resources and saves money without affecting the high performance of this product. HP printing and imaging equipment marked with the ENERGY STAR® logo is qualified to the U.S. Environmental Protection Agency's ENERGY STAR specifications for imaging equipment. The following mark will appear on ENERGY STAR qualified imaging products:

Additional ENERGY STAR qualified imaging product model information is listed at:

www.hp.com/go/energystar

HP LaserJet print supplies

Original HP Supplies were designed with the environment in mind. HP makes it easy to conserve resources and paper when printing. And when you are done, we make it easy and free to recycle.[1]

All HP cartridges returned to HP Planet Partners go through a multiphase recycling process where materials are separated and refined for use as raw material in new Original HP cartridges and everyday products. No Original HP cartridges returned through HP Planet Partners are ever sent to a landfill, and HP never refills or resells Original HP cartridges.

To participate in the HP Planet Partners return and recycling program, visit www.hp.com/hprecycle. Select your country/region for information on how to return HP printing supplies. Multi-lingual program information and instructions are also included in every new HP LaserJet print cartridge package.

[1] Program availability varies. For more information, visit www.hp.com/hprecycle.

Toner consumption

EconoMode uses less toner, which might extend the life of the print cartridge. HP does not recommend the full-time use of EconoMode. If EconoMode is used full-time, the toner supply might outlast the mechanical parts in the print cartridge. If print quality begins to degrade and is no longer acceptable, consider replacing the print cartridge.

For more information

To obtain information about these environmental topics:

- Product environmental profile sheet for this and many related HP products
- HP's commitment to the environment
- HP's environmental management system
- HP's end-of-life product return and recycling program
- Material Safety Data Sheets

Visit www.hp.com/go/environment.

Also, visit www.hp.com/hprecycle.

Brazil hardware recycling information

Não descarte o produto eletrônico em lixo comum

Este produto eletrônico e seus componentes não devem ser descartados no lixo comum, pois embora estejam em conformidade com padrões mundiais de restrição a substâncias nocivas, podem conter, ainda que em quantidades mínimas, substâncias impactantes ao meio ambiente. Ao final da vida útil deste produto, o usuário deverá entregá-lo à HP. A não observância dessa orientação sujeitará o infrator às sanções previstas em lei.

Após o uso, as pilhas e/ou baterias dos produtos HP deverão ser entregues ao estabelecimento comercial ou rede de assistência técnica autorizada pela HP.

Para maiores informações, inclusive sobre os pontos de recebimento, acesse:

www.hp.com.br/reciclar

Substances Table (China)

电器电子产品中有害物质的名称及含有信息表

The Table of names and content information of hazardous substances in electrical and electronic products

根据中国《电器电子产品有害物质限制使用管理办法》

As required by China's Management Methods for Restricted Use of Hazardous Substances in Electrical and Electronic Products

产品中有害物质的名称及含有的信息表

Table of names and content information of hazardous substances in the products

部件名称 Part name	有害物质 Hazardous substances									
	铅 (Pb)	汞 (Hg)	镉 (Cd)	六价铬 (Cr(VI))	多溴联苯 (PBBs)	多溴二苯醚 (PBDEs)	邻苯二甲酸二正丁酯 (DBP)	邻苯二甲酸二异丁酯 (DIBP)	邻苯二甲酸丁苄酯 (BBP)	邻苯二甲酸二（2-乙基）己酯 (DEHP)
打印引擎	×	○	○	○	○	○	○	○	○	○
控制面板	×	○	○	○	○	○	○	○	○	○
塑料外壳	○	○	○	○	○	○	○	○	○	○
格式化板组件	×	○	○	○	○	○	○	○	○	○
碳粉盒	×	○	○	○	○	○	○	○	○	○

注 1：○：表示该有害物质在该部件所有均质材料中的含量均不超出电器电子产品有害物质限制使用国家标准要求。

Note 1: ○ : denotes that the content of said hazardous substance in all of the homogeneous materials in the said part does not exceed the limits given in the national standard regarding restricted use of hazardous substances in electrical and electronic products.

× ：表示该有害物质至少在该部件的某一均质材料中的含量超出电器电子产品有害物质限制使用国家标准要求。

× : denotes that the content of said hazardous substance in at least one of the homogeneous materials in the said part exceeds the limits given in the national standard regarding restricted use of hazardous substances in electrical and electronic products.

注 2：以上未列出的部件,表明其有害物质含量均不超出电器电子产品有害物质限制使用国家标准要求。

Note 2: Parts not listed above indicate that the content of hazardous substances contained therein does not exceed the limits given in the national standard regarding restricted use of hazardous substances in electrical and electronic products.

CHR-LJ-PK-SFP-03

SEPA Ecolabel User Information (China)

中国环境标识认证产品用户说明

噪声大于 63.0 dB(A)的办公设备不宜放置于办公室内，请在独立的隔离区域使用。

如需长时间使用本产品或打印大量文件，请确保在通风良好的房间内使用。

如您需要确认本产品处于零能耗状态，请按下电源关闭按钮，并将插头从电源插座断开。

您可以使用再生纸，以减少资源耗费。

The regulation of the implementation on China energy label for printer, fax, and copier

依据“复印机、打印机和传真机能源效率标识实施规则”，本打印机具有中国能效标签。根据“复印机、打印机和传真机能效限定值及 能效等级”（“GB21521”）决定并计算得出该标签上所示的能效等级和 TEC（典型能耗）值。

1. 能效等级

能效等级分为三个等级，等级 1 级能效最高。根据产品类型和打印速度标准决定能效限定值。

2. 能效信息

2.1 LaserJet 打印机和高性能喷墨打印机

- 典型能耗

  典型能耗是正常运行 GB21521 测试方法中指定的时间后的耗电量。此数据表示为每周千瓦时 (kWh)。

标签上所示的能效数字按涵盖根据“复印机、打印机和传真机能源效率标识实施规则”选择的登记装置中所有配置的代表性配置测定而 得。因此，本特定产品型号的实际能耗可能与标签上所示的数据不同。

有关规格的详细信息，请参阅 GB21521 标准的当前版本。

Disposal of waste equipment by users (EU, UK, and India)

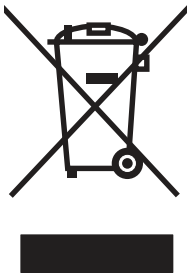

This symbol means do not dispose of your product with your other household waste. Instead, you should protect human health and the environment by handing over your waste equipment to a designated collection point for the recycling of waste electrical and electronic equipment. For more information, please contact your household waste disposal service, or go to: www.hp.com/hprecycle.

EU Microplastics

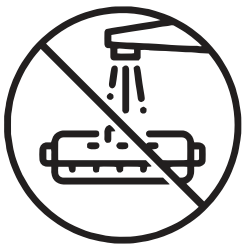

Product Power Data per European Union Commission Regulation 1275/2008 (EU)

For product power data, including the power consumption of the product in networked standby if all wired network ports are connected and all wireless network ports are activated, please refer to section

P14 'Additional Information' of the product IT ECO Declaration at www.hp.com/hpinfo/globalcitizenship/environment/productdata/itecodesktop-pc.html.

India Battery Waste Management (BWM) Rules

EPR Registration No: 141163

Restriction on Hazardous Substances statement (India)

This product, as well as its related consumables and spares, complies with the reduction in hazardous substances provisions of the "India E-waste Rule 2016." It does not contain lead, mercury, hexavalent chromium, polybrominated biphenyls or polybrominated diphenyl ethers in concentrations exceeding 0.1 weight % and 0.01 weight % for cadmium, except where allowed pursuant to the exemptions set in Schedule 2 of the Rule.

Substances Table (Taiwan)

台灣 限用物質含有情況標示聲明書

Taiwan Declaration of the Presence Condition of the Restricted Substances Marking

單元Unit	限用物質及其化學符號 Restricted substances and its chemical symbols					
	鉛Lead (Pb)	汞Mercury (Hg)	鎘Cadmium (Cd)	六價鉻 Hexavalent chromium (Cr^{+6})	多溴聯苯 Polybrominated biphenyls (PBB)	多溴二苯醚 Polybrominated diphenyl ethers (PBDE)
列印引擎 Print engine	—	○	○	○	○	○
外殼和紙匣 External Casing and Trays	○	○	○	○	○	○
電源供應器 Power Supply	—	○	○	○	○	○
電線 Cables	○	○	○	○	○	○
印刷電路板 Print printed circuit board	—	○	○	○	○	○
控制面板 Control panel	—	○	○	○	○	○
碳粉匣 Cartridge	○	○	○	○	○	○

備考1.〝超出0.1 wt %〞及〝超出0.01 wt %〞係指限用物質之百分比含量超出百分比含量基準值。

Note 1：“Exceeding 0.1 wt %” and “exceeding 0.01 wt %” indicate that the percentage content of the restricted substance exceeds the reference percentage value of presence condition.

備考2.〝○〞係指該項限用物質之百分比含量未超出百分比含量基準值。

Note 2：“○” indicates that the percentage content of the restricted substance does not exceed the percentage of reference value of presence.

備考3.〝—〞係指該項限用物質為排除項目。

Note 3：The “–” indicates that the restricted substance corresponds to the exemption.

WEEE (Turkey)

Türkiye Cumhuriyeti: AEEE Yönetmeliğine Uygundur

C Regulatory information

Regulatory statements

Regulatory model identification numbers

For regulatory identification purposes, your product is assigned a regulatory model number. Regulatory model numbers should not be confused with marketing names or product numbers.

Table C-1 **Regulatory model identification numbers**

Product model number	Regulatory model number
HP LaserJet Enterprise X60357dn	BOISB-2402-00
HP LaserJet Enterprise X60357	BOISB-2402-02

European Union & United Kingdom Regulatory Notice

Products bearing the CE marking and UKCA marking comply with one or more of the following EU Directives and/or equivalent UK Statutory Instruments as may be applicable: Low Voltage Directive 2014/35/EU, EMC Directive 2014/30/EU, Eco Design Directive 2009/125/EC, RED 2014/53/EU, RoHS Directive 2011/65/EU, Battery Regulation 2023/1542.

Compliance with these directives is assessed using applicable European Harmonized Standards. The full EU and UK Declaration of Conformity can be found at the following website: www.hp.com/go/certificates (Search with the product model name or its Regulatory Model Number (RMN), which may be found on the regulatory label.)

The point of contact for regulatory matters is: Email reg@hp.com

The EU point of contact for regulatory matters is:

HP REG 23010, 08028, Barcelona, Spain

The UK point of contact for regulatory matters is:

HP Inc UK Ltd, Regulatory Enquiries, Earley West, 300 Thames Valley Park Drive, Reading, RG6 1PT

The product meets the requirements of EN 55032 and its equivalent UK/BS EN standard, in which case the following applies: 'Warning – This is a Class A product. In a domestic environment this product may cause radio interference in which case the user may be required to take adequate measures.'

European Union Consumer Laser Product

CLASS 1 LASER PRODUCT

CONSUMER LASER PRODUCT

EN 50689:2021

FCC regulations

This equipment has been tested and found to comply with the limits for a Class A digital device, pursuant to Part 15 of the FCC rules. These limits are designed to provide reasonable protection against harmful interference when the equipment is operated in a commercial environment. This equipment generates, uses, and can radiate radio frequency energy, and if not installed and used in accordance with the instruction manual, may cause harmful interference to radio communications. Operation of this equipment in a residential area is likely to cause harmful interference in which case the user will be required to correct the interference at his own expense.

NOTE: Any changes or modifications to the printer that are not expressly approved by HP could void the user's authority to operate this equipment.

Use of a shielded interface cable is required to comply with the Class A limits of Part 15 of FCC rules.

Australia/New Zealand

WARNING! This is a class A product. In a domestic environment this product may cause radio interference in which case the user may be required to take adequate measures.

Canada - Industry Canada ICES Compliance Statement

CAN ICES (A)/NMB (A)

VCCI statement (Japan)

VCCI 32-1 規定適合の場合

この装置は、クラスA機器です。この装置を住宅環境で使用すると電波妨害を引き起こすことがあります。この場合には使用者が適切な対策を講ずるよう要求されることがあります。

VCCI — A

Power cord instructions

Make sure your power source is adequate for the product voltage rating. The voltage rating is on the product label. The product uses either 100-127 Vac or 220-240 Vac and 50/60 Hz.

Connect the power cord between the product and a grounded AC outlet.

CAUTION: To prevent damage to the product, use only the power cord that is provided with the product.

NOTE: Symbol "~" represents alternating current.

Power cord statement (Japan)

製品には、同梱された電源コードをお使い下さい。
同梱された電源コードは、他の製品では使用出来ません。

Product Safety Statements

Do not extend more than one paper tray at a time.

Do not use paper tray as a step.

All trays must be closed while relocating/moving product.

Keep hands out of paper tray when closing.

If the printer has a keyboard, close keyboard tray when not in use.

EMC statement (China)

警告：在居住环境中，运行此设备可能会造成无线电干扰。

EMC statement (Korea)

이 기기는 업무용 환경에서 사용할 목적으로 적합성평가를 받은 기기로서 가정용 환경에서 사용하는 경우 전파간섭의 우려가 있습니다.

EMC statement (Taiwan)

為避免電磁干擾，本產品不應安裝或使用於住宅環境。

Laser safety

The Center for Devices and Radiological Health (CDRH) of the U.S. Food and Drug Administration has implemented regulations for laser products manufactured since August 1, 1976. Compliance is mandatory for products marketed in the United States. The device is certified as a "Class 1" laser product under the U.S. Department of Health and Human Services (DHHS) Radiation Performance Standard according to the Radiation Control for Health and Safety Act of 1968. Since radiation emitted inside the device is completely confined within protective housings and external covers, the laser beam cannot escape during any phase of normal user operation.

⚠ WARNING! Using controls, making adjustments, or performing procedures other than those specified in this user guide may result in exposure to hazardous radiation.

For other US/Canada regulatory matters, please contact:

HP Inc.

1501 Page Mill Rd, Palo Alto, CA 94304, USA

Email contact: reg@hp.com or Telephone contact: +1 (650) 857-1501

Laser statement for Finland

Luokan 1 laserlaite

HP LaserJet Enterprise X60357, X60357dn, laserkirjoitin on käyttäjän kannalta turvallinen luokan 1 laserlaite. Normaalissa käytössä kirjoittimen suojakotelointi estää lasersäteen pääsyn laitteen ulkopuolelle. Laitteen turvallisuusluokka on määritetty standardin EN 60825-1:2014 +A11:2021 mukaisesti.

VAROITUS !

Laitteen käyttäminen muulla kuin käyttöohjeessa mainitulla tavalla saattaa altistaa käyttäjän turvallisuusluokan 1 ylittävälle näkymättömälle lasersäteilylle.

VARNING !

Om apparaten används på annat sätt än i bruksanvisning specificerats, kan användaren utsättas för osynlig laserstrålning, som överskrider gränsen för laserklass 1.

HUOLTO

HP LaserJet Enterprise X60357, X60357dn - kirjoittimen sisällä ei ole käyttäjän huollettavissa olevia kohteita. Laitteen saa avata ja huoltaa ainoastaan sen huoltamiseen koulutettu henkilö. Tällaiseksi huoltotoimenpiteeksi ei katsota väriainekasetin vaihtamista, paperiradan puhdistusta tai muita käyttäjän käsikirjassa lueteltuja, käyttäjän tehtäväksi tarkoitettuja ylläpitotoimia, jotka voidaan suorittaa ilman erikoistyökaluja.

VARO !

Mikäli kirjoittimen suojakotelo avataan, olet alttiina näkymättömällelasersäteilylle laitteen ollessa toiminnassa. Älä katso säteeseen.

VARNING !

Om laserprinterns skyddshölje öppnas då apparaten är i funktion, utsättas användaren för osynlig laserstrålning. Betrakta ej strålen.

Tiedot laitteessa käytettävän laserdiodin säteilyominaisuuksista: Aallonpituus 775-800 nm Teho 5 m W Luokan 3B laser.

Nordic Statements (Denmark, Finland, Norway, Sweden)

Denmark:

Apparatets stikprop skal tilsuttes en stikkontakt med jord, som giver forbindelse til stikproppens jord.

Finland:

Laite on liitettävä suojakoskettimilla varustettuun pistorasiaan.

Norway:

Apparatet må tilkoples jordet stikkontakt.

Sweden:

Apparaten skall anslutas till jordat uttag.

GS statement (Germany)

Das Gerät ist nicht für die Benutzung im unmittelbaren Gesichtsfeld am Bildschirmarbeitsplatz vorgesehen. Um störende Reflexionen am Bildschirmarbeitsplatz zu vermeiden, darf dieses Produkt nicht im unmittelbaren Gesichtsfeld platziert werden.

Das Gerät ist kein Bildschirmarbeitsplatz gemäß BildscharbV. Bei ungünstigen Lichtverhältnissen (z. B. direkte Sonneneinstrahlung) kann es zu Reflexionen auf dem Display und damit zu Einschränkungen der Lesbarkeit der dargestellten Zeichen kommen.

Die Bilddarstellung dieses Gerätes ist nicht für verlängerte Bildschirmtätigkeiten geeignet.

Eurasian Conformity (Armenia, Belarus, Kazakhstan, Kyrgyzstan)

EAC

Өндіруші және өндіру мерзімі

HP Inc. Мекенжайы: 1501 Page Mill Road, Palo Alto, California 94304, U.S.

Өнімнің жасалу мерзімін табу үшін өнімнің қызмет көрсету жапсырмасындағы 10 таңбадан тұратын сериялық нөмірін қараңыз.

4-ші, 5-ші және 6-шы сандар өнімнің жасалған жылы мен аптасын көрсетеді. 4-ші сан жылын көрсетеді, мысалы «3» саны «2013» дегенді білдіреді.

5-ші және 6-шы сандары берілген жылдың қай аптасында жасалғанын көрсетеді, мысалы, «12» саны «12-ші» апта дегенді білдіреді.

Жергілікті өкілдіктері:

Ресей: ООО "ЭйчПи Инк",
Ресей Федерациясы, 125171, Мәскеу, Ленинград шоссесі, 16А блок 3,
Телефон/факс: +7 495 797 35 00 / +7 499 92132 50

Қазақстан: "ЭйчПи Глобал Трэйдинг Би.Ви." компаниясының Қазақстандағы филиалы, Қазақстан Республикасы, 050040, Алматы к., Бостандық ауданы, Әл-Фараби даңғылы, 77/7,
Телефон/факс: +7 727 355 35 52

EAC

Производитель и дата производства

HP Inc. Адрес: 1501 Page Mill Road, Palo Alto, California 94304, U.S.

Дата производства зашифрована в 10-значном серийном номере, расположенном на наклейке со служебной информацией изделия.

4-я, 5-я и 6-я цифры обозначают год и неделю производства. 4-я цифра обозначает год, например, «3» обозначает, что изделие произведено в «2013» году.
5-я и 6-я цифры обозначают номер недели в году производства, например, «12» обозначает «12-ю» неделю.

Местные представители:

Россия: ООО "ЭйчПи Инк",
Российская Федерация, 125171, г. Москва, Ленинградское шоссе, 16А, стр.3,
Телефон/факс: +7 495 797 35 00 / +7 499 92132 50

Казахстан: Филиал компании "ЭйчПи Глобал Трэйдинг Би.Ви.", Республика Казахстан, 050040, г. Алматы, Бостандыкский район, проспект Аль-Фараби, 77/7, Телефон/факс: + 7 727 355 35 52

Taiwan BSMI USB Port (Walk-up) statement

台灣 BSMI USB 埠 (Walk-up) 聲明

產品前端, 上方或側邊之 USB 埠 (walk-up 埠), 僅支持隨身碟.

Battery statements

Coin/button cell battery safety statements

The following statements are only applicable for products with a coin/button cell battery.

⚠ **WARNING!** This product contains a coin/button cell battery. If the coin/button cell battery is swallowed, it can cause severe internal burns in just 2 hours and can lead to death.

⚠ **WARNING!** Keep new and used batteries away from children.

⚠ **WARNING!** If the battery compartment does not close securely, stop using the product and keep it away from children.

⚠ **WARNING!** If you think batteries might have been swallowed or placed inside any part of the body, seek immediate medical attention.

Wireless statements

European Regulatory Notice

The telecommunications functionality of this product may be used in the following European countries/regions:

Austria, Belgium, Bulgaria, Cyprus, Czech Republic, Denmark, Estonia, Finland, France, Germany, Greece, Hungary, Iceland, Ireland, Italy, Latvia, Liechtenstein, Lithuania, Luxembourg, Malta, Netherlands, Norway, Poland, Portugal, Romania, Slovak Republic, Slovenia, Spain, Sweden, Switzerland, and United Kingdom.

European regulatory notice

Wireless functionality in Europe

For products with 802.11b/g/n or Bluetooth radio	This product operates on radio frequency between 2400 MHz and 2483.5 MHz, with a transmit power of 20 dBm (100 mW) or less.
For products with 802.11a/b/g/n radio	**CAUTION:** IEEE802.11x wireless LAN with 5.15-5.35 GHz frequency band is restricted for **indoor use only** in all European Union member states, EFTA (Iceland, Norway, Liechtenstein) and most other European countries (i.e.: Switzerland, Turkey, Republic of Serbia). Using this WLAN application outdoors might lead to interference issues with existing radio services. This product operates on radio frequencies between 2400 MHz and 2483.5 MHz, and between 5170 MHz and 5710 MHz, with a transmit power of 20 dBm (100 mW) or less.

FCC compliance statement—United States

Exposure to radio frequency radiation

⚠ CAUTION: The radiated output power of this device is far below the FCC radio frequency exposure limits. Nevertheless, the device shall be used in such a manner that the potential for human contact during normal operation is minimized.

In order to avoid the possibility of exceeding the FCC radio frequency exposure limits, human proximity to the antenna shall not be less than 20 cm (8 in) during normal operation.

This device complies with Part 15 of FCC Rules. Operation is subject to the following two conditions: (1) this device may not cause interference, and (2) this device must accept any interference, including interference that may cause undesired operation of the device.

⚠ CAUTION: Based on Section 15.21 of the FCC rules, changes of modifications to the operation of this product without the express approval by HP may invalidate its authorized use.

Australia

This device incorporates a radio-transmitting (wireless) device. For protection against radio transmission exposure, it is recommended that this device be operated no less than 20 cm from the head, neck, or body.

Brazil

Este equipamento não tem direito à proteção contra interferência prejudicial e não pode causar interferência em sistemas devidamente autorizados.

Para maiores informações consulte o site da ANATEL – www.anatel.gov.br

Canada

For Indoor Use. This digital apparatus does not exceed the Class B limits for radio noise emissions from digital apparatus as set out in the radio interference regulations of the Canadian Department of Communications. The internal wireless radio complies with RSS 210 of Industry Canada.

Pour l´usage d´intérieur. Le présent appareil numérique n´émet pas de bruits radioélectriques dépassant les limites applicables aux appareils numériques de Classe B prescribes dans le règlement sur le brouillage radioélectrique édicté par le Ministère des Communications du Canada. Le composant RF interne est conforme à la norme CNR-210 d´Industrie Canada.

Products with 5 GHz Operation Industry of Canada

⚠ CAUTION: When using IEEE 802.11a wireless LAN, this product is restricted to indoor use, due to its operation in the 5.15- to 5.25-GHz frequency range. Industry Canada requires this product to be used indoors for the frequency range of 5.15 GHz to 5.25 GHz to reduce the potential for harmful interference to co-channel mobile satellite systems. High-power radar is allocated as the primary user of the 5.25- to 5.35-GHz and 5.65- to 5.85-GHz bands. These radar stations can cause interference with and/or damage to this device.

Lors de l'utilisation d'un réseau local sans fil IEEE 802.11a, ce produit est réservé à une utilisation en intérieur en raison de sa plage de fréquences, comprise entre 5,15 et 5,25 GHz. Industrie Canada recommande l'utilisation en intérieur de ce produit pour la plage de fréquences comprise entre 5,15 et 5,25 GHz afin de réduire les interférences nuisibles potentielles avec les systèmes de satellite portables utilisant le même canal. Le radar à haute puissance est défini comme étant le principal

utilisateur des bandes 5,25 à 5,35 GHz et 5,65 à 5,85 GHz. Ces stations radar peuvent provoquer des interférences sur ce périphérique et/ou l'endommager.

Exposure to Radio Frequency Radiation (Canada)

⚠ **WARNING!** Exposure to Radio Frequency Radiation The radiated output power of this device is below the Industry Canada radio frequency exposure limits. Nevertheless, the device should be used in such a manner that the potential for human contact is minimized during normal operation.

To avoid the possibility of exceeding the Industry Canada radio frequency exposure limits, human proximity to the antennas should not be less than 20 cm (8 inches).

AVERTISSEMENT! Exposition aux émissions de fréquences radio. La puissance de sortie émise par ce périphérique est inférieure aux limites fixées par Industrie Canada en matière d'exposition aux fréquences radio. Néanmoins, les précautions d'utilisation du périphérique doivent être respectées afin de limiter tout risque de contact avec une personne.

China CMIIT Wireless Statement

中国无线电发射设备通告

型号核准代码显示在产品本体的铭牌上。

Notice for use in Japan

この機器は技術基準適合証明又は工事設計認証を受けた無線設備を搭載しています。

Mexico statement

Aviso para los usuarios de México

"La operación de este equipo está sujeta a las siguientes dos condiciones: (1) es posible que este equipo o dispositivo no cause interferencia perjudicial y (2) este equipo o dispositivo debe aceptar cualquier interferencia, incluyendo la que pueda causar su operación no deseada."

Para saber el modelo de la tarjeta inalámbrica utilizada, revise la etiqueta regulatoria de la impresora.

Taiwan statement

取得審驗證明之低功率射頻器材，非經核准，公司、商號或使用者均不得擅自變更頻率、加大功率或變更原設計之特性及功能。低功率射頻器材之使用不得影響飛航安全及干擾合法通信；經發現有干擾現象時，應立即停用，並改善至無干擾時方得繼續使用。前述合法通信，指依電信管理法規定作業之無線電通信。低功率射頻器材須忍受合法通信或工業、科學及醫療用電波輻射性電機設備之干擾。

Taiwan NCC statement

應避免影響附近雷達系統之操作。

高增益指向性天線只得應用於固定式點對點系統。

Thailand Wireless Statement

เครื่องวิทยุคมนาคมนี้มีระดบั การแผ่คลื่นแม่เหล็กไฟฟ้ าสอดคล้องตามมาตรฐานความปลอดภยั ต่อสุขภาพของมนุษย์จากการ ใช้เครื่องวิทยุคมนาคมที่คณะกรรมการกิจการโทรคมนาคมแห่งชาติประกาศกำหนด

This radio communication equipment has the electromagnetic field strength in compliance with the Safety Standard for the Use of Radio Communication Equipment on Human Health announced by the National Telecommunications Commission.

China Short Range Device Statement

Notice to Users in China/中国用户须知

如果适用，使用微功率短距离无线电设备应符合国家无线电管理有关规定。

（一）本产品符合《微功率短距离无线电发射设备目录和技术要求》的具体条款和使用场景。天线类型为 PCB天线和/或外置天线，控制、调整及开关等使用方法详见本手册或产品说明书,使用时温度和电压的环境条件详见本手册或产品说明书。

（二）不得擅自改变使用场景或使用条件、扩大发射频率范围、加大发射功率（包括额外加装射频功率放大器），不得擅自更改发射天线；

（三）不得对其他合法的无线电台（站）产生有害干扰，也不得提出免受有害干扰保护；

（四）应当承受辐射射频能量的工业、科学及医疗（ISM）应用设备的干扰或其他合法的无线电台（站）干扰；

（五）如对其他合法的无线电台（站）产生有害干扰时，应立即停止使用，并采取措施消除干扰后方可继续使用；

（六）在航空器内和依据法律法规、国家有关规定、标准划设的射电天文台、气象雷达站、卫星地球站（含测控、测距、接收、导航站）等军民用无线电台（站）、机场等的电磁环境保护区域内使用微功率设备，应当遵守电磁环境保护及相关行业主管部门的规定；

（七）禁止在以机场跑道中心点为圆心、半径 5000米的区域内使用各类模型遥控器。

Index

Symbols/Numerics

550-sheet trays
  jams 72

A

acoustic specifications 10
AirPrint 41, 43
alternative letterhead mode 12, 24
Android devices
  printing from 41, 43
anticounterfeit supplies 117, 130

B

batteries included 136, 137
battery notice,Brazil 136
Battery Waste Management (BWM) 142
bin, output
  locating 2
Bonjour
  identifying 48
browser requirements
  HP embedded Web Server 48
  HP Embedded Web Server 48

C

cartridge
  replacing 28
cartridge access area
  location 3
cartridges
  non-HP 117, 129
  recycling 136, 138
  warranty 117, 129
ce marking 144
Class 1 consumer laser 145
cleaning
  paper path 104
control panel
  help 64
  locating 2
  locating features 4
copy settings
  HP Embedded Web Server 48, 49
counterfeit supplies 117, 130
customer support
  online 117, 135

D

default gateway, setting 57, 58
deleting
  stored jobs 38, 40
digital send settings
  HP Embedded Web Server 48, 49
dimensions, printer 9
disposal, end-of-life 136, 137
document feeder
  paper-feeding problems 67
double-sided printing
  Mac 36
  Windows 33
drivers, supported 8
duplex printing
  Mac 36
duplex printing (double-sided)
  settings (Windows) 33
  Windows 33
duplexer
  jams 72
duplexing
  manually (Mac) 36
  manually (Windows) 33

E

easy-access USB printing 43
EconoMode setting 104
electrical specifications 10
electronic hardware
  recycling 136, 137
Embedded Web Server
  changing network settings 56
  changing printer name 57
  opening 56
Embedded Web Server (EWS)
  assigning passwords 59
  features 48
  network connection 48
end-of-life disposal 136, 137
energy use, optimizing 61
envelopes
  orientation 12
envelopes, loading 24
environmental stewardship program 136
eu microplastics 141
Eurasian conformity 144, 148
Explorer, versions supported
  HP Embedded Web Server 48

F

fax settings
  HP Embedded Web Server 48, 49
FCC regulations 144, 145
Finnish laser safety statement 144, 146
fraud Web site 117, 130

G

gateway, setting default 57, 58
general configuration
  HP Embedded Web Server 48, 49, 51

H

hard disks
  encrypted 59, 61
hardware recycling, Brazil 136, 139
Help button
  locating 4
help, control panel 64
Home button
  locating 4
HP Customer Care 117, 135
HP Embedded Web Server
  changing network settings 56
  changing printer name 57
  copy settings 48, 49
  digital send settings 48, 49
  fax settings 48, 49
  general configuration 48, 49, 51
  HP Web Services 48, 49, 54
  information pages 48-50
  network settings 48, 49, 55
  opening 56
  other links list 48, 49, 52

print settings 48, 49, 52
scan settings 48, 49
security settings 48, 49, 53
supplies 52
troubleshooting tools 48, 49, 53
HP Embedded Web Server (EWS)
features 48
network connection 48
HP fraud Web site 117, 130
HP Web Jetadmin 62
HP Web Services
enabling 48, 49, 54

I

image quality
check toner cartridge status 104
check toner-cartridge status 105
information pages
HP Embedded Web Server 48-50
interface ports
location 3
Internet Explorer, versions supported
HP Embedded Web Server 48
IP Security 59, 60
IPsec 59, 60
IPv4 address 57
IPv6 address 58

J

jams
550-sheet trays 72
auto-navigation 73
causes of 73
duplexer 72
locations 72
output bin 72, 101
Tray 1 72
Tray 2 72
Japanese VCCI statement 144, 145
Jetadmin, HP Web 62
jobs, stored
creating (Windows) 38
deleting 38, 40
Mac settings 38
printing 38, 40

K

Korean EMC statement 144, 146

L

label
orientation 26
labels
orientation, loading 27
printing (Windows) 33
printing on 26
labels, loading 26
laser safety statements 144, 146
license, software 117, 130
loading
paper in Tray 1 12
paper in Tray 2 18
paper in Tray 3 18
paper in Tray 4 18
paper in Tray 5 18
local area network
location 3
lock
formatter 59, 61

M

Mac driver settings
Job Storage 38
managing network 56
managing the printer
overview 48
manual duplex
Mac 36
Windows 33
material restrictions 136, 137
Material Safety Data Sheet (MSDS) 136, 137
memory
included 6
memory chip (toner)
locating 28
memory chip, toner cartridge
description 117, 130
mercury-free product 136, 137
mobile printing
Android devices 41, 43
mobile printing, software
supported 9
multiple pages per sheet
printing (Mac) 36
printing (Windows) 33

N

Near Field Communication
printing 41, 42
Netscape Navigator, versions supported
HP embedded Web Server 48
HP Embedded Web Server 48
network
printer name, changing 57
settings, changing 56
settings, viewing 56
network duplex settings, changing 58
network link speed settings, changing 58
network settings
HP Embedded Web Server 48, 49, 55
networks
default gateway 57, 58
HP Web Jetadmin 62
IPv4 address 57
IPv6 address 58
subnet mask 57, 58
supported 6
NFC connect and print 41, 42
non-HP supplies 117, 129

O

on/off button
locating 2
online help, control panel 64
online support 117, 135
operating systems, supported 8
operating-environment range
printer 10
orientation
labels 27
other links list
HP Embedded Web Server 48, 49, 52
output bin
clear jams 72, 101
locating 2

P

pages per minute 6
pages per sheet
selecting (Mac) 36
selecting (Windows) 33
paper
jams 72, 73
loading Tray 1 12

loading Tray 2 18
loading Tray 3 18
loading Tray 4 18
loading Tray 5 18
selecting 104, 107
Tray 1 orientation 12, 15
Tray X orientation 21
paper jams
550-sheet trays 72
duplexer 72
locations 72
output bin 72, 101
Tray 1 72
Tray 2 72
paper pickup problems
solving 67, 69
paper trays
overview 12
paper type
selecting (Windows) 33
paper types
selecting (Mac) 36
potential shock hazard 2
power
consumption 10
power connection
location 3
power usage 61
print drivers, supported 8
print media
loading in Tray 1 12
print on both sides
Mac 36
manually, Windows 33
Windows 33
print settings
HP Embedded Web Server 48, 49, 52
printer
operating-environment range 10
overview 1
printer view 2
printing
from USB storage accessories 43
overview 33
stored jobs 38, 40
printing on both sides
settings (Windows) 33
private printing 38

R

recycling 136, 138
electronic hardware 136, 137
replacing
toner cartridge 28
reset factory settings 64

S

safety statements 144, 146
scan settings
HP Embedded Web Server 48, 49
security
encrypted hard disk 59, 61
security settings
HP Embedded Web Server 48, 49, 53
settings
reset to factory (default) settings 64
Sign In button
locating 4
Sign Out button
locating 4
sleep delay
setting 61
software
software license agreement 117, 130
special paper
printing (Windows) 33
specifications
electrical and acoustic 10
speed, optimizing 61
storage, job
Mac settings 38
store print jobs 38
stored jobs
creating (Mac) 38
creating (Windows) 38
deleting 38, 40
printing 38, 40
storing jobs
with Windows 38
subnet mask 57, 58
supplies
counterfeit 117, 130
HP Embedded Web Server 52
low threshold settings 65
non-HP 117, 129
recycling 136, 138
replacing toner cartridge 28
using when low 65
support
online 117, 135
supported operating systems 8
system requirements
HP Embedded Web Server 48

T

Taiwan EMC statement 146
Taiwan EMI statement 144
TCP/IP
manually configuring IPv4 parameters 57
manually configuring IPv6 parameters 58
technical support
online 117, 135
toner cartridge
components 28
low threshold settings 65
replacing 28
using when low 65
toner cartridges
memory chips 117, 130
non-HP 117, 129
recycling 136, 138
See toner cartridges
warranty 117, 129
touchscreen
locating features 4
transparencies
printing (Windows) 33
Tray 1
jams 72
loading envelopes 24
locating 2
paper orientation 12, 15
Tray 2
jams 72
loading 18
locating 2
paper orientation 21
Tray 3
loading 18
paper orientation 21
Tray 4
loading 18
Tray 5
loading 18
trays
capacity 6
included 6
locating 2
use alternative letterhead mode 24
troubleshooting
check toner cartridge status 104

check toner-cartridge
status 105
jams 72, 73
overview 64
paper feed problems 67
troubleshooting tools
HP Embedded Web Server 48, 49, 53
two-sided printing
settings (Windows) 33

U

USB port
enabling 43-46
location 3
USB storage accessories
printing from 43

W

warranty
customer self repair 117, 135
license 117, 130
product 117
toner cartridges 117, 129
waste disposal 136, 141
web browser requirements
HP Embedded Web Server 48
Web sites
customer support 117, 135
fraud reports 117, 130
Material Safety Data Sheet (MSDS) 136, 137
websites
HP Web Jetadmin, downloading 62
weight, printer 9
Wi-Fi Direct Print 9, 41, 42